D-Link®
CORPORATION

DOC.NO.	305DES815----A2-		
REV. DATE		VERSION	A
ISSUED DATE	87.5.29	PAGE OF	0 /26

TITLE: DES-815 Rev.A2 Circuit Diagram

生效日期: 87.5.29

DES-815 Rev. A2

Circuit Diagram

It contains only one part of component boards.

I. Bottom Board 23 Pages
II. LED Display Board (see DES-815 Rev. A1)

REVISION	STATUS
PAGE	REV
0 ~ 0-1	A
1 ~ 26	A

APPROVED	CHECKED		DEPARTMENT	CREATED
10/9/97			ED5	葛其永

文件履歷表

DOC.NO. 305DES815----A2-
VERSION A
PAGE OF 0-1 / 25

修訂日期	版本	變更內容
87. 5. 29	A	新增，依據NPRDES 815----A2-01

PAGE 01 Thunder Switch (TNETX3150)
PAGE 02 EALE (TNETX315AL)
PAGE 03 S-EEPROM (ATMEL 24C02)
PAGE 04 EDO-DRAM 4M (TMS418169DZ) (60ns)
PAGE 05 SRAM 128K*16 (W241024AJ-15)
PAGE 06 Q-PHY-A (TNETE2004)
PAGE 07 Q-X'former-A (S553-5999-38)
PAGE 08 Q-PHY-B (TNETE2004)
PAGE 09 Q-X'former-B (S553-5999-38)
PAGE 10 Q-PHY-C (TNETE2004)
PAGE 11 Q-X'former-C (S553-5999-38)
PAGE 12 100-PHY-A + X'formeer (ML6692+S558-5999-64)
PAGE 13 100-PHY-B + X'formeer (ML6692+S558-5999-64)
PAGE 14 Phone-Jack (RJ-45 Ports)
PAGE 15 AUI PROT (SEEQ 80C26 + PT4153 + LT1001)
PAGE 16 POWER
PAGE 17 RESET & CLOCK
PAGE 18 Display-1 TRAFFIC (EPLD ALTERA 7032-15)
PAGE 19 Display-2 LINK/ACTIVE (GAL AMD 16V8H*3)
PAGE 20 Display-3 FDUP/COL (GAL AMD 16V8H*4)
PAGE 21 Duplex Dip-Switch Settings (MC68HC705J1A)
PAGE 22 Parallel Port Interface
PAGE 23 MII Interface

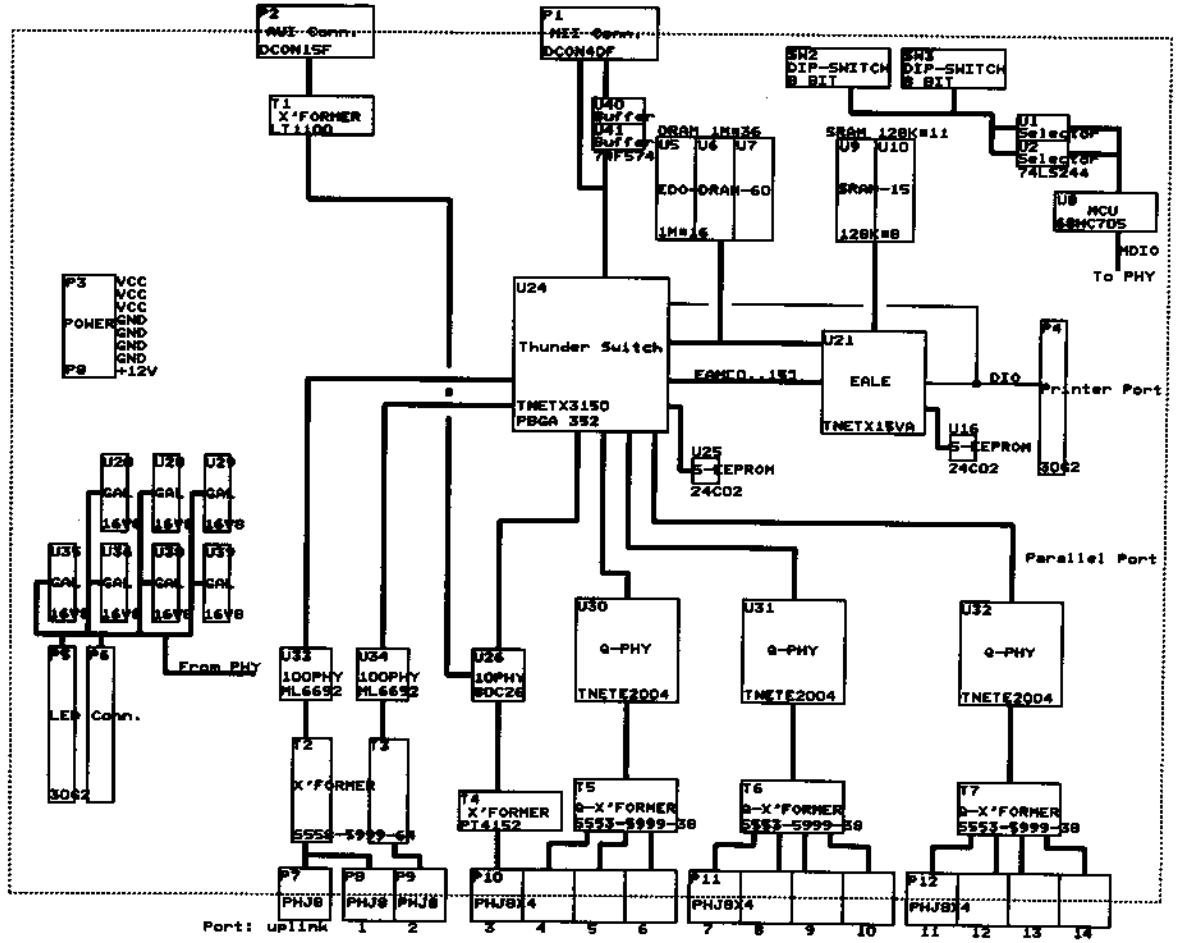

Block Diagram of DES-815 Rev.Ax

D-Link Corp.	Approved: [redacted] 4/6/97	Prepared : Cheer Ko	高其水
	Checked: [redacted] 8. 11, 4	Issued Date: 10/13/96	
		Title: TI-Based Ether-Switch —— ES815B	
DOC. NO.: 305DES815----A2-	Version: A	Size: B Document Number	REV A1
		Date: September 10, 1997 Sheet of	

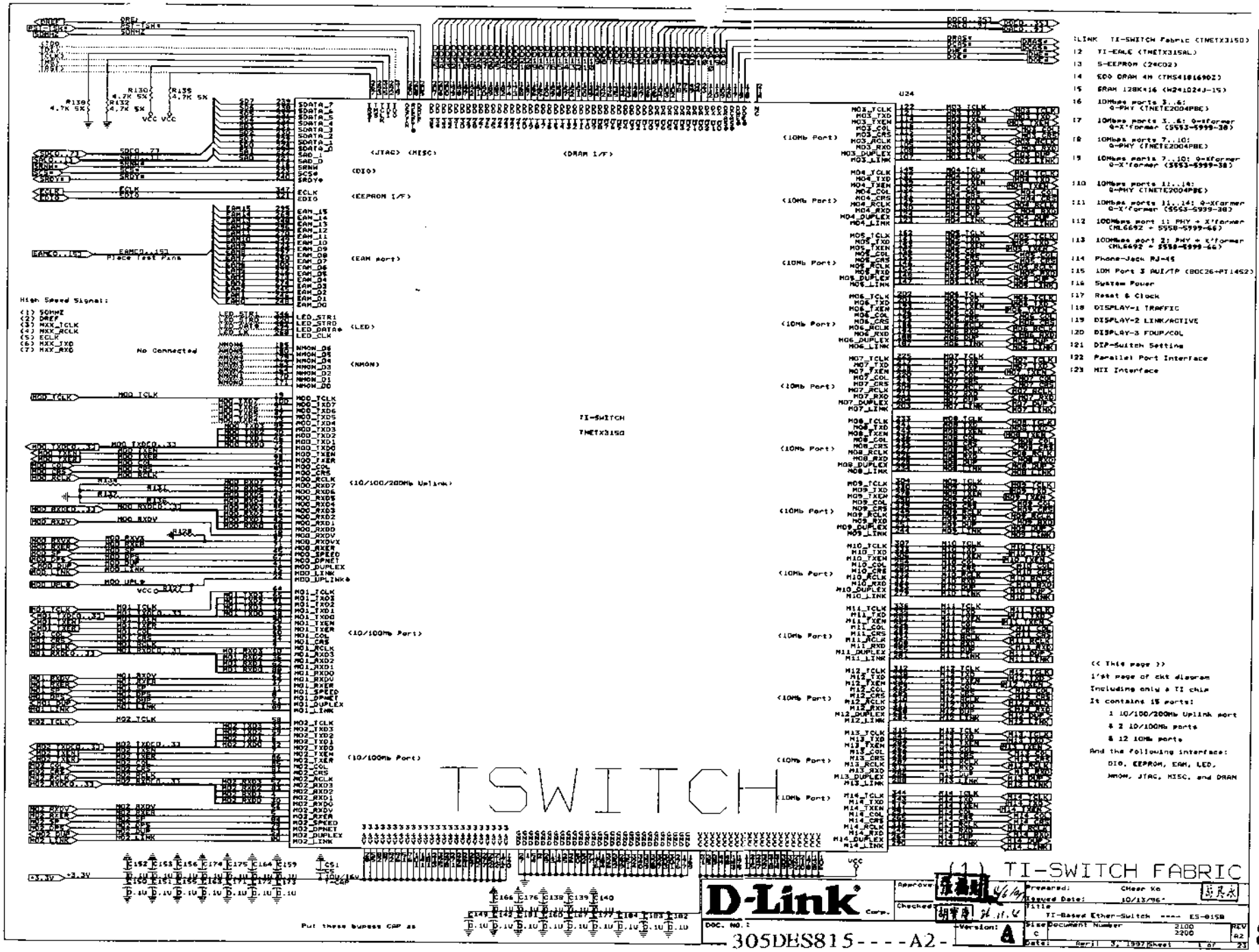
TSWITCH
TI-SWITCH
TMETX3150
(10Mb Port)
(10/100Mb Port)
(10/100/200Mb Uplink)
(DRAM I/F)
(JTAG) (MISC)
(EEPROM I/F)
(EAM Port)
(LED)
(NMON)
(DIO)
U24
High Speed Signal:
(1) 50MHZ
(2) DMEF
(3) MXX_TCLK
(4) MXX_RCLK
(5) ECLK
(6) MXX_TXD
(7) MXX_RXD
No Connected
Place Test Pins
Put these bypass CAP as
:LINK TI-SWITCH Fabric (TMETX3150)
:2 TI-EAGLE (TMETX315AL)
:3 S-EEPROM (24C02)
:4 EDO DRAM 4M (TMS418160Z)
:5 SRAM 128K*16 (W241024J-15)
:6 10Mbps ports 3..6: G-PHY (TNETE2004PBC)
:7 10Mbps ports 3..6: G=former G-X'former (5553-5999-38)
:8 10Mbps ports 7..10: G-PHY (TNETE2004PBC)
:9 10Mbps ports 7..10: G=Xformer G-X'former (5553-5999-38)
:10 10Mbps ports 11..14: G-PHY (TNETE2004PBC)
:11 10Mbps ports 11..14: G-Xformer G-X'former (5553-5999-38)
:12 100Mbps port 1: PHY + X'former (ML6692 + 5558-5999-46)
:13 100Mbps port 2: PHY + X'former (ML6692 + 5558-4999-46)
:14 Phone-Jack RJ-45
:15 10M Port 3 AUI/TP (80C26+PT1452)
:16 System Power
:17 Reset & Clock
:18 DISPLAY-1 TRAFFIC
:19 DISPLAY-2 LINK/ACTIVE
:20 DISPLAY-3 FDUP/COL
:21 DIP-Switch Setting
:22 Parallel Port Interface
:23 MII Interface
((This page))
1'st page of ckt diagram
Including only a TI chip
It contains 15 ports:
1 10/100/200Mb Uplink port
& 2 10/100Mb ports
& 12 10Mb ports
And the following interface:
DIO, EEPROM, EAM, LED,
NMON, JTAG, MISC, and DRAM
D-Link Corp.
DOC. NO.: 305DES815----A2-
Version: A
(1) TI-SWITCH FABRIC
Prepared: Chess Ko
Issued Date: 10/15/96
Title: TI-Based Ether-Switch ---- ES-815B
Size: C
Document Number: 3100 3200
REV: A2
Date: April 3, 1997 Sheet 1 of 23

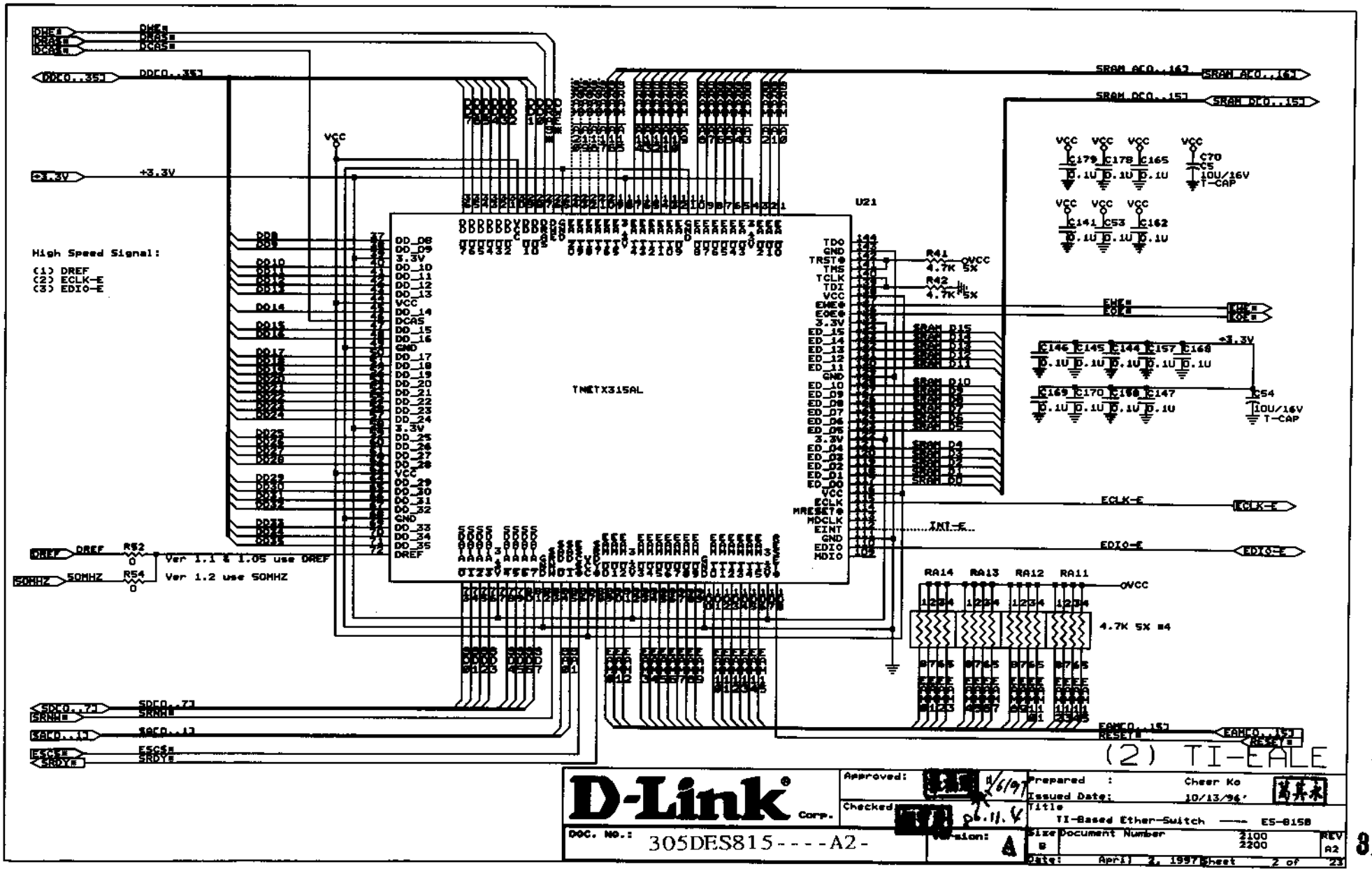
High Speed Signal:
(1) DREF
(2) ECLK-E
(3) EDIO-E
TNETX315AL
U21
Ver 1.1 & 1.05 use DREF
Ver 1.2 use 50MHZ
4.7K 5X
4.7K 5X
4.7K 5X #4
(2) TI-EALE
D-Link Corp.
DOC. NO.: 305DES815----A2-
TI-Based Ether-Switch ---- ES-8158
Cheer Ko
10/13/96
April 2, 1997
Sheet 2 of 23

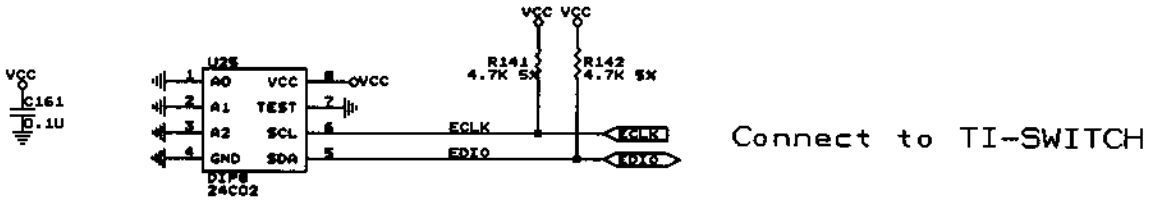

Connect to TI-SWITCH

High Speed Signal:

(1) ECLK
(2) ECLK-E
(3) EDIO
(4) EDIO-E

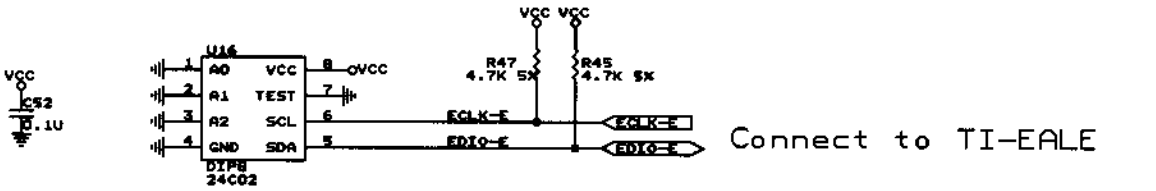

Connect to TI-EALE

(3) 2 Wire S-EEPROM

D-Link Corp.	Approved:	11/6/97	Prepared : Cheer Ko
	Checked:	11.4	Issued Date: 10/13/96
DOC. NO.: 305DES815----A2-	Version: A		Title: TI-Based Ether-Switch ---- ES-8158
			Size: B Document Number 2100 2200 REV A2
			Date: April 2, 1997 Sheet 3 of 23

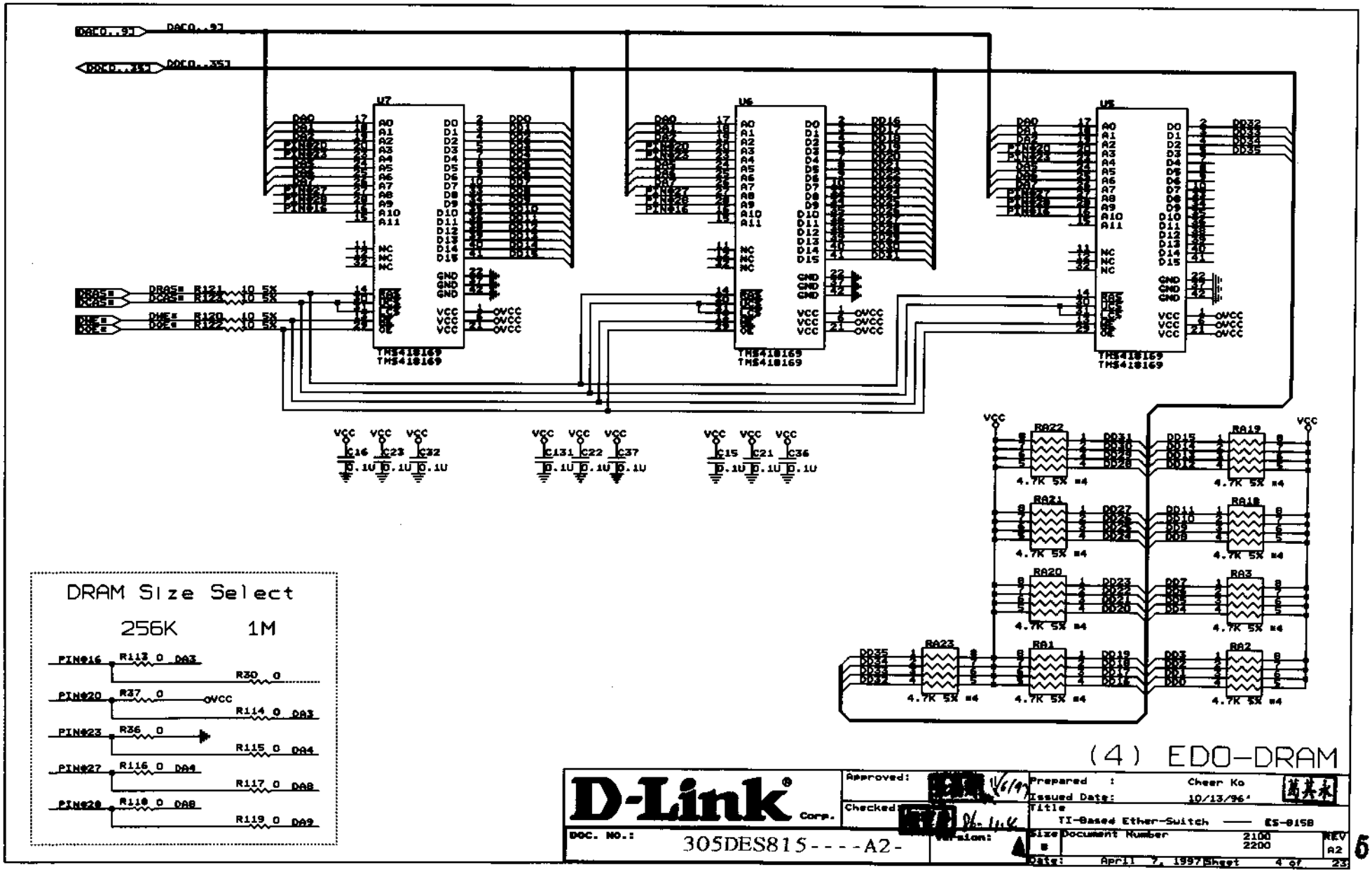
DRAM Size Select
256K 1M
PIN#16 R113 0 DA3
R30 0
PIN#20 R37 0 VCC
R114 0 DA3
PIN#23 R36 0
R115 0 DA4
PIN#27 R116 0 DA4
R117 0 DA8
PIN#28 R118 0 DA8
R119 0 DA9
U7
U6
U5
TMS418169
DA[0..9]
DD[0..35]
DRAS= R121 10 5%
DCAS= R123 10 5%
DWE= R120 10 5%
DOE= R122 10 5%
VCC
C16 C23 C32
C131 C22 C37
C15 C21 C36
0.1U
RA22 RA19 RA21 RA18 RA20 RA3 RA23 RA1 RA2
4.7K 5% *4
(4) EDO-DRAM
D-Link Corp.
Approved:
Checked:
Prepared : Cheer Ko
Issued Date: 10/13/96
Title
TI-Based Ether-Switch —— ES-815B
DOC. NO.: 305DES815----A2-
Version:
Size B
Document Number 2100 2200
REV A2
Date: April 7, 1997
Sheet 4 of 23

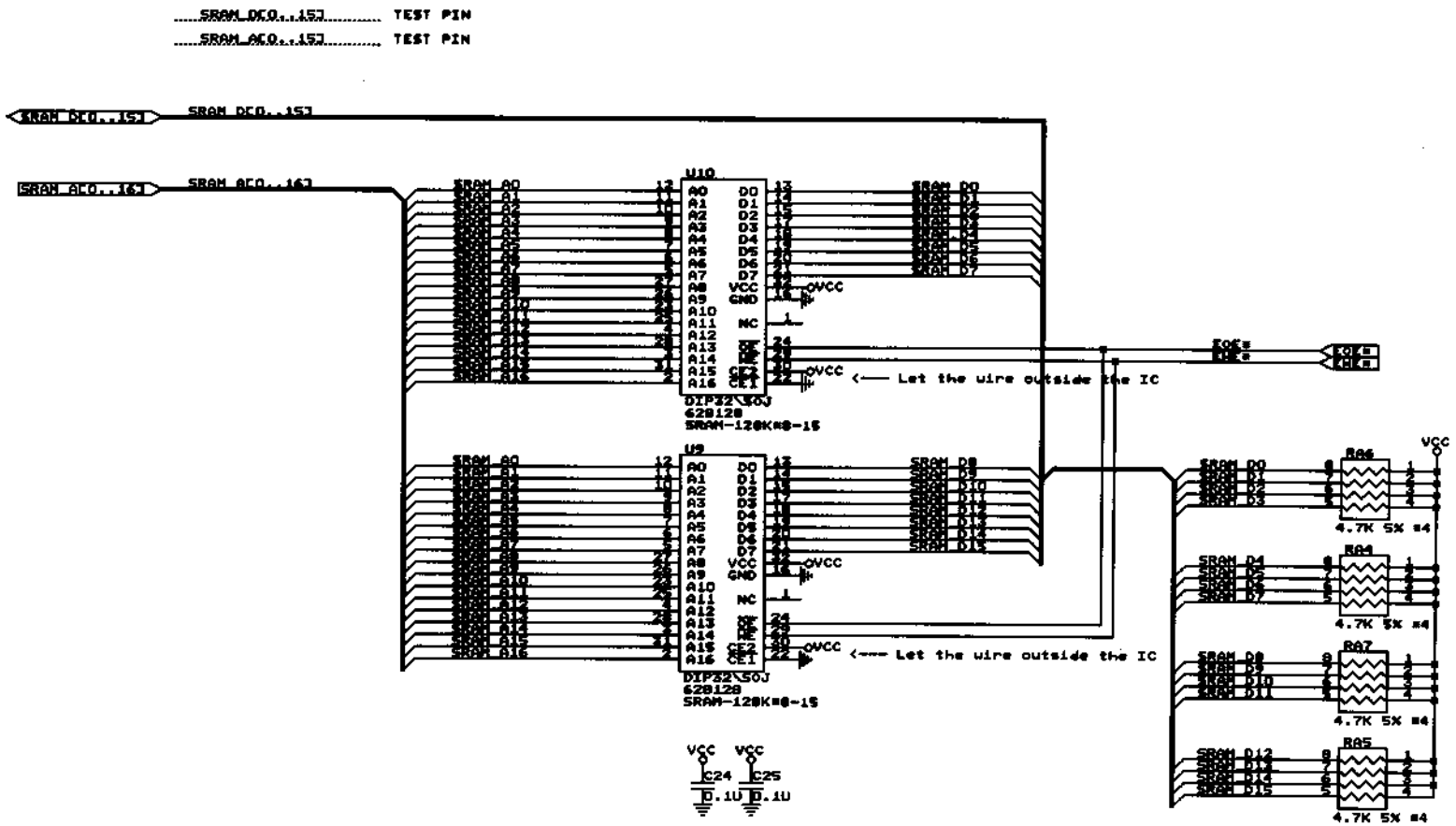

(5) EALE-SRAM

D-Link Corp.	Approved:	Prepared : Cheer Ko 葛其永	
	Checked:	Issued Date: 10/13/96	
DOC. NO.: 305DES815----A2-	Version: A	Title: TI-Based Ether-Switch ---- ES-8158	
		Size: B Document Number: 2100 2200	REV: A2
		Date: April 2, 1997 Sheet 5 of 23	

6/25

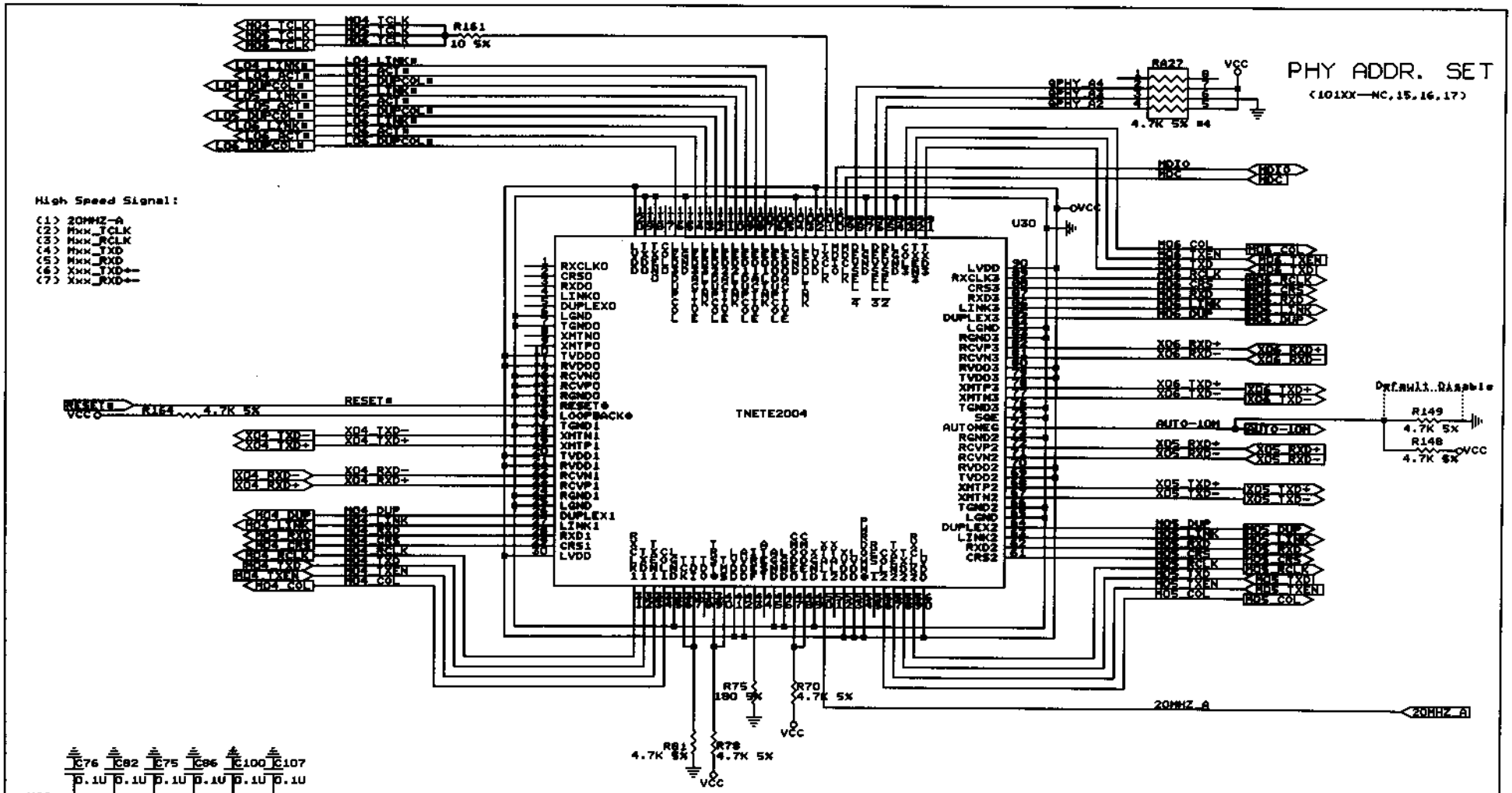
PHY ADDR. SET
(101XX—NC,15,16,17)
High Speed Signal:
(1) 20MHZ-A
(2) Mxx_TCLK
(3) Mxx_RCLK
(4) Mxx_TXD
(5) Mxx_RXD
(6) Xxx_TXD+-
(7) Xxx_RXD+-
TNETE2004
U30
RESET#
R164 4.7K 5%
R161 10 5%
R822 4.7K 5% 8*4
R75 180 5%
R70 4.7K 5%
R81 4.7K 5%
R78 4.7K 5%
R149 4.7K 5%
R148 4.7K 5%
Default..Enable
AUTO-ION
20MHZ_A
C76 C82 C75 C86 C100 C107
C121 C204 C203 C202 C187
0.1U
VCC
(6) 10Mb ports 4..6: QPHY
D-Link Corp.
Approved:
Checked:
Prepared : Cheer Ko
Issued Date: 10/13/96
Title: TI-Based Ether-Switch --- ES-815B
DOC. NO.: 305DES815----A2-
Version: A
Size: B
Document Number: 2100 2200
REV: A2
Date: April 7, 1997 Sheet 6 of 23
TI-SWITCH NO.: NC, 4, 5, 6
PHY - ADDRESS: NC, 15, 16, 17

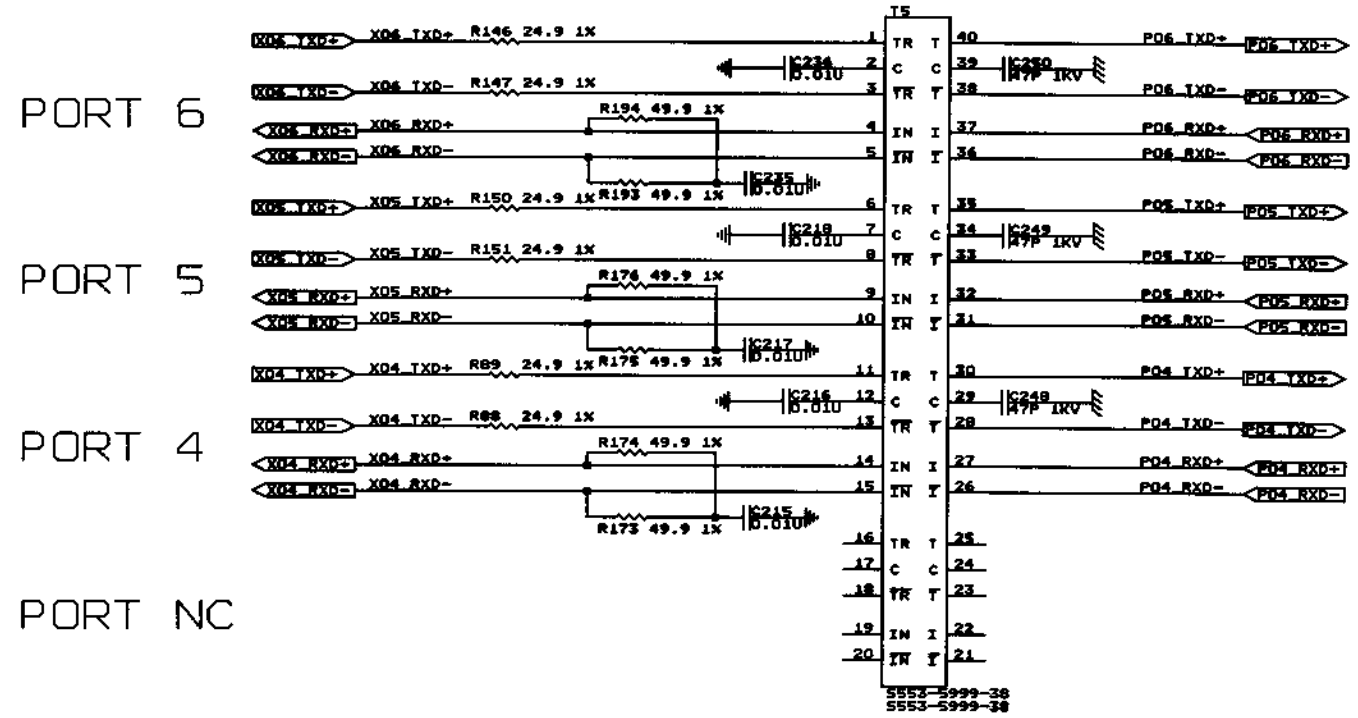

High Speed Signal:

(1) Xxx_TXD+-
(2) Xxx_RXD+-
(3) Pxx_TXD+-
(4) Pxx_RXD+-

(7) 10Mb ports 4..6: Xformer

TI-SWITCH NO.: NC, 4, 5, 6
PHY - ADDRESS: NC, 15, 16, 17

D-Link Corp.

Approved:		Prepared :	Cheer Ko
Checked:		Issued Date:	10/13/96
DOC. NO.:	305DES815----A2-	Version:	A
Title	TI-Based Ether-Switch —— ES-815B		
Size: B	Document Number: 2100 2200	REV: A2	
Date: April 2, 1997	Sheet 7 of 23		

8/26

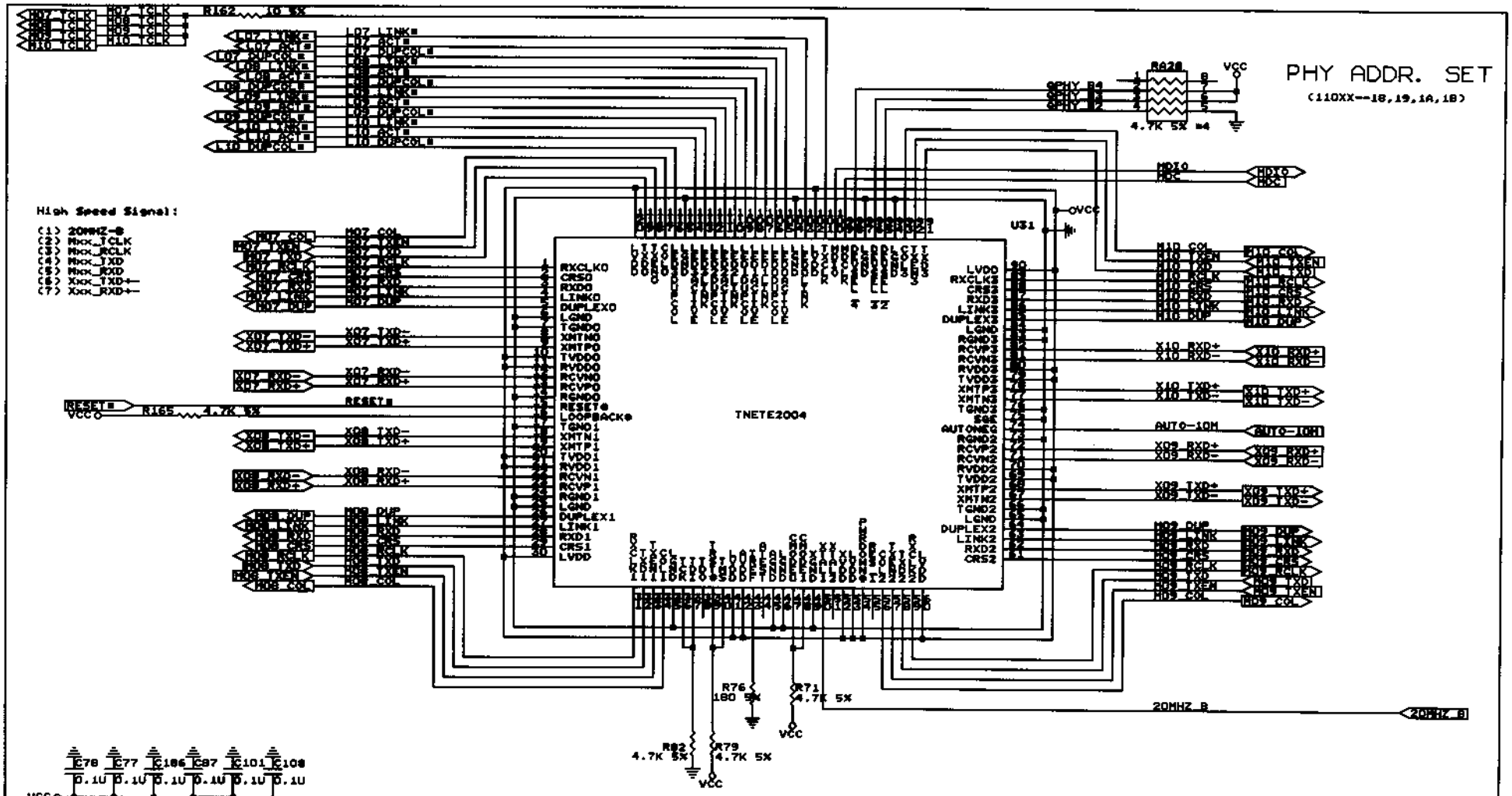
PHY ADDR. SET
(110XX--18,19,1A,1B)
High Speed Signal:
(1) 20MHZ-B
(2) Mxx_TCLK
(3) Mxx_RCLK
(4) Mxx_TXD
(5) Mxx_RXD
(6) Xxx_TXD+-
(7) Xxx_RXD+-
TNETE2004
U31
R162 10 5%
R165 4.7K 5%
R76 180 5%
R71 4.7K 5%
R82 4.7K 5%
R79 4.7K 5%
4.7K 5% x4
20MHZ_B
(8) 10Mb ports 7..10: QPHY
TI-SWITCH NO.: 7, 8, 9, 10
PHY - ADDRESS: 18, 19, 1A, 1B
D-Link Corp.
DOC. NO.: 305DES815----A2-
Version: A
Prepared : Cheer Ko
Issued Date: 10/13/96'
Title TI-Based Ether-Switch ---- ES-815B
Size B
Document Number 2100 2200
REV A2
Date: April 7, 1997 Sheet 8 of 23

9/26

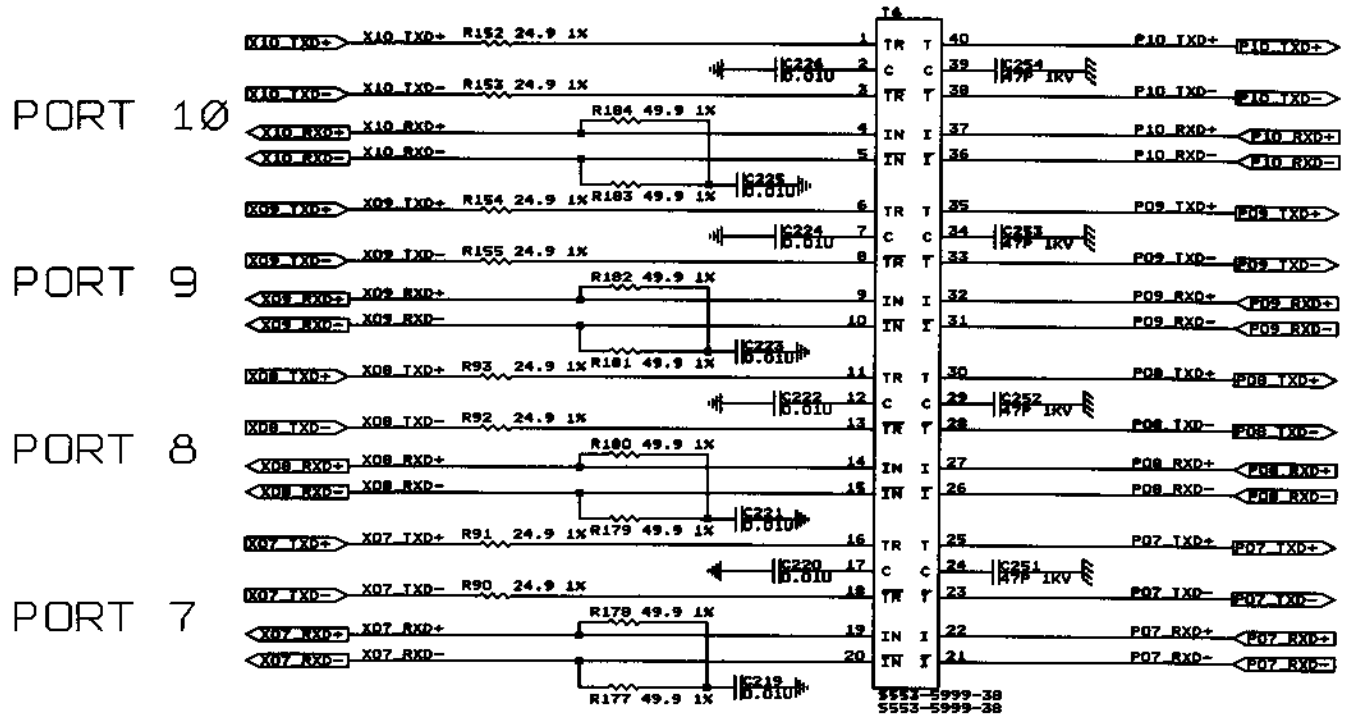

(9) 10Mb ports 7..10: Xformer

High Speed Signal:

(1) Xxx_TXD+
(2) Xxx_TXD-
(3) Pxx_TXD+
(4) Pxx_RXD-

TI-SWITCH NO.: 7, 8, 9, 10
PHY - ADDRESS: 18, 19, 1A, 1B

D-Link Corp.

Approved:
Checked:
Version:

Prepared : Cheer Ko
Issued Date: 10/13/96

Title: TI-Based Ether-Switch ---- ES-8158

DOC. NO.: 305DES815----A2-

Size: B | Document Number: 2100 2200 | REV: A2

Date: April 2, 1997 | Sheet 9 of 23

10/25

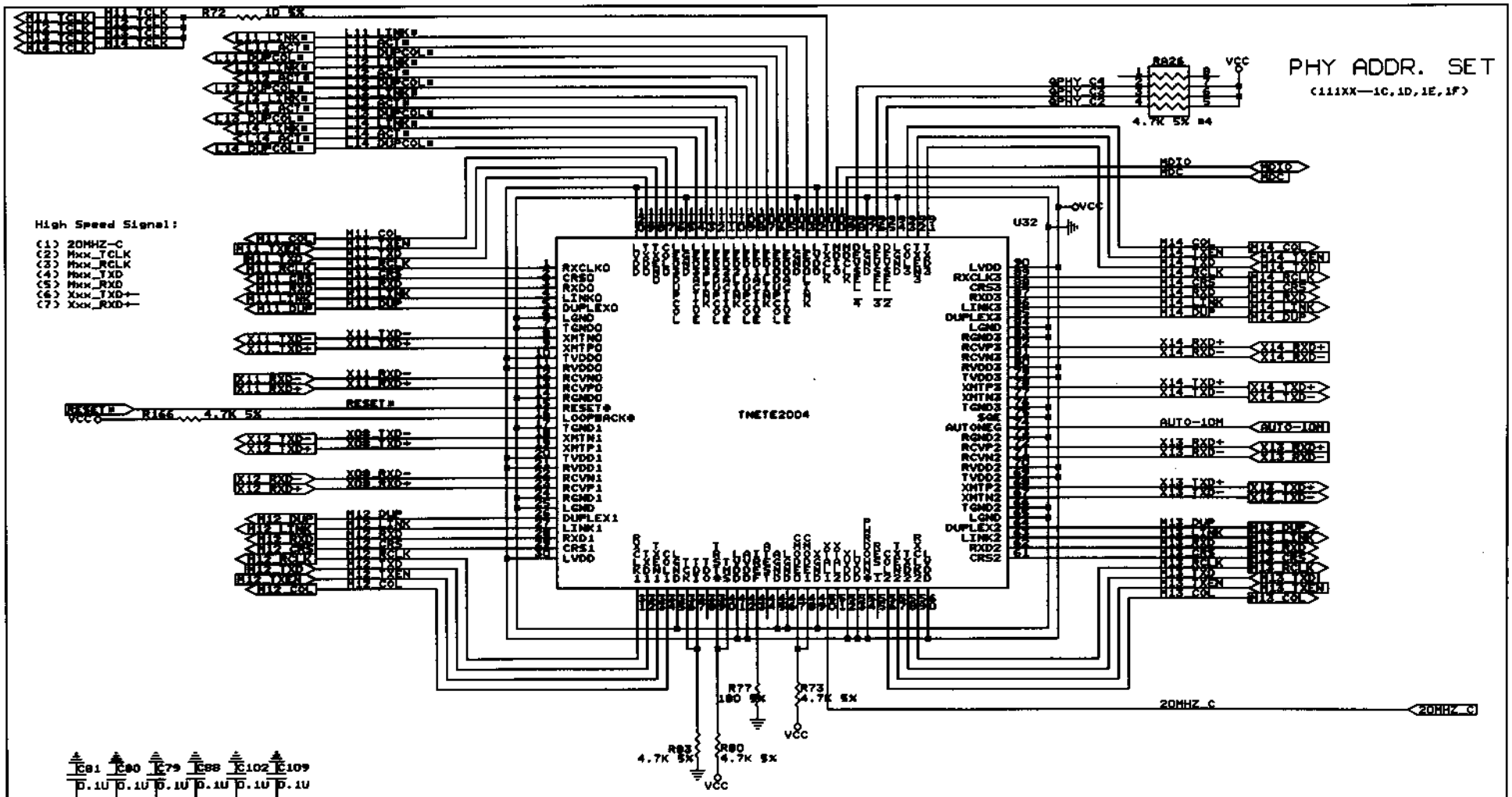
PHY ADDR. SET
(111XX—1C,1D,1E,1F)
High Speed Signal:
(1) 20MHZ_C
(2) Mxx_TCLK
(3) Mxx_RCLK
(4) Mxx_TXD
(5) Mxx_RXD
(6) Xxx_TXD+/-
(7) Xxx_RXD+/-
U32
TNETE2004
RESET#
AUTO-10M
20MHZ_C
(10) 10Mb ports 11..14: QPHY
TI-SWITCH NO.: 11, 12, 13, 14
PHY - ADDRESS: 1C, 1D, 1E, 1F
D-Link Corp.
DOC. NO.: 305DES815----A2-
Prepared : Cheer Ko
Issued Date: 10/13/96
Title
TI-Based Ether-Switch ---- ES-8158
Size B
Document Number 2100 2200
REV A2
Date: April 7, 1997 Sheet 10 of 23

11/26

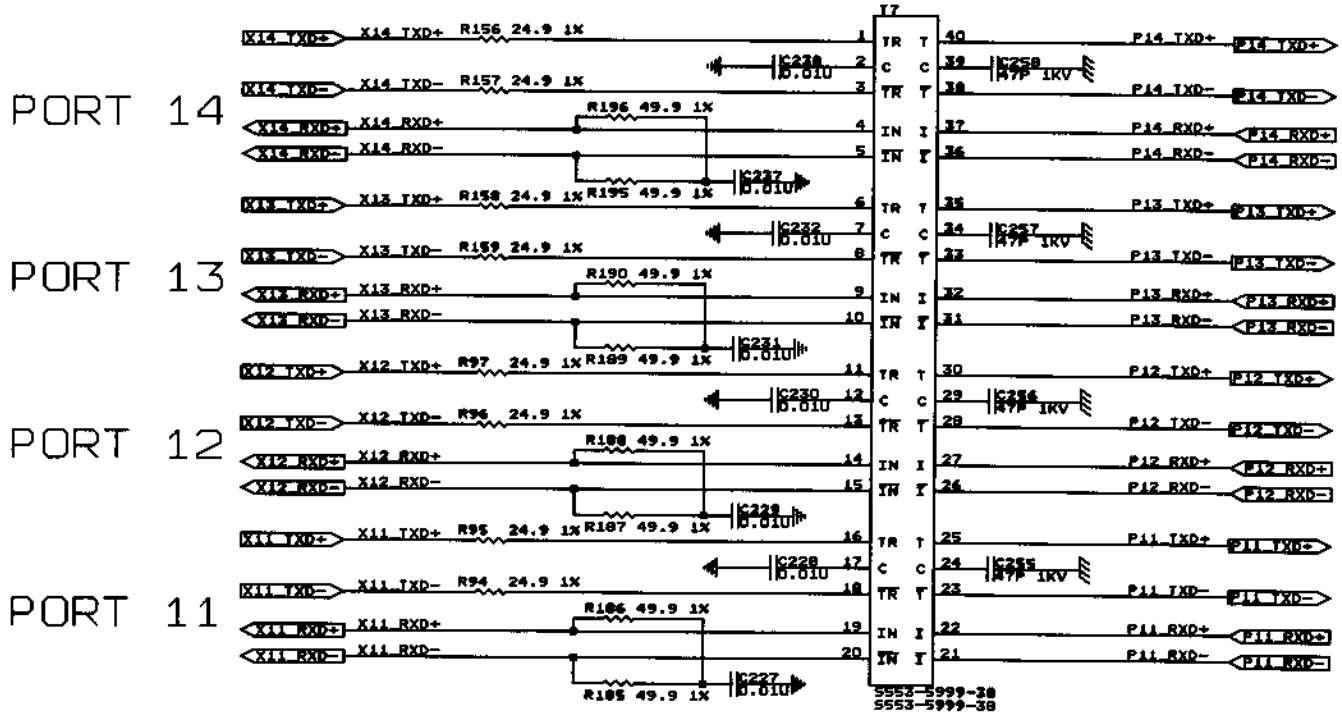

High Speed Signal:

(1) Xxx_TXD+-
(2) Xxx_RXD+-
(3) Pxx_TXD+-
(4) Pxx_RXD+-

(11) 10Mb ports 11..14: Xformer

TI-SWITCH NO.: 11, 14, 15, 16
PHY - ADDRESS: 1C, 1D, 1E, 1F

D-Link Corp.

Approved:	11/6/97	Prepared :	Cheer Ko 高其永
Checked:	96.11.4	Issued Date:	10/13/96'
DOC. NO.:	305DES815----A2-	Version:	▲
Title	TI-Based Ether-Switch ---- ES-815B		
Size: B	Document Number	2100 2200	REV: A2
Date:	April 2, 1997	Sheet 11 of 23	

12/25

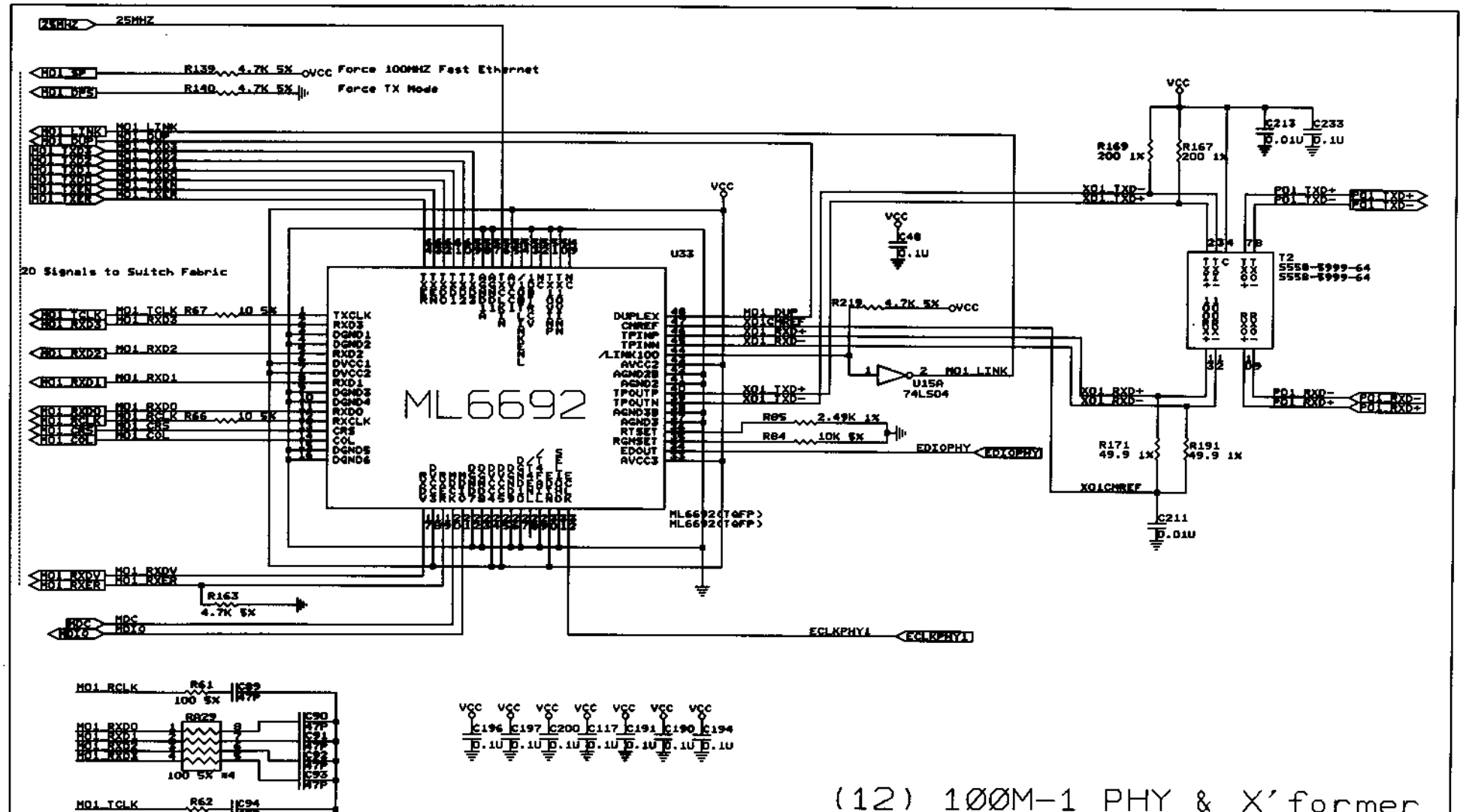

(12) 100M-1 PHY & X'former

D-Link Corp.	Approved:	Prepared :	Cheer Ko
	Checked:	Issued Date:	10/13/96
		Title	TI-Based Ether-Switch —— ES-815B
DOC. NO.: 305DES815----A2-	Version: A	Size B	Document Number 2100 2200 REV A2
		Date: April 7, 1997	Sheet 12 of 23

18/26

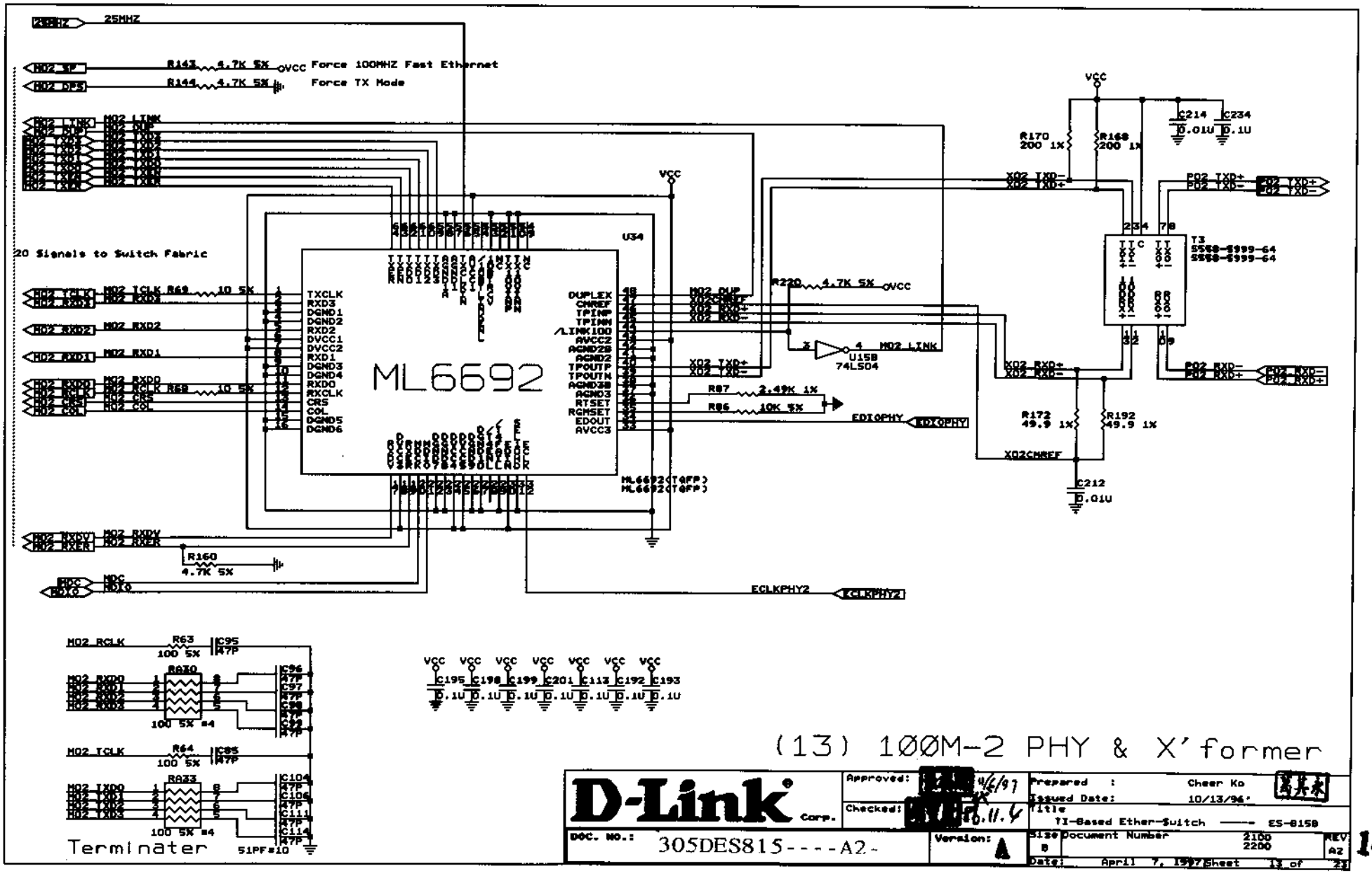

D-Link Corp.	Approved:	Prepared :	Cheer Ko
	Checked:	Issued Date:	10/13/96
DOC. NO.: 305DES815----A2-	Version: A	Title: TI-Based Ether-Switch ——— ES-8150	
		Size: B Document Number: 2100 2200	REV: A2
		Date: April 7, 1997 Sheet 13 of 23	

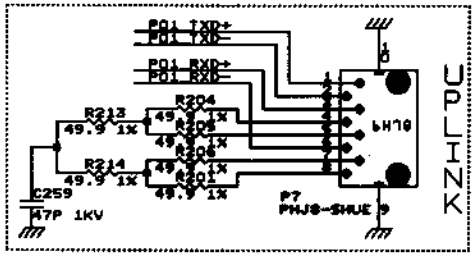

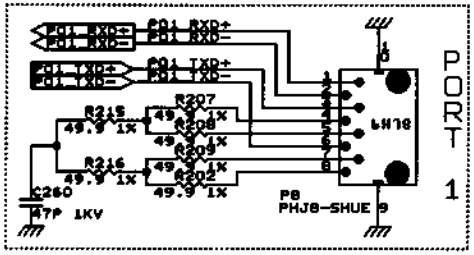

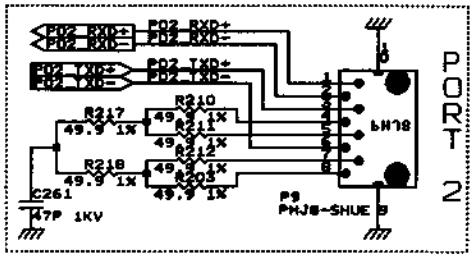

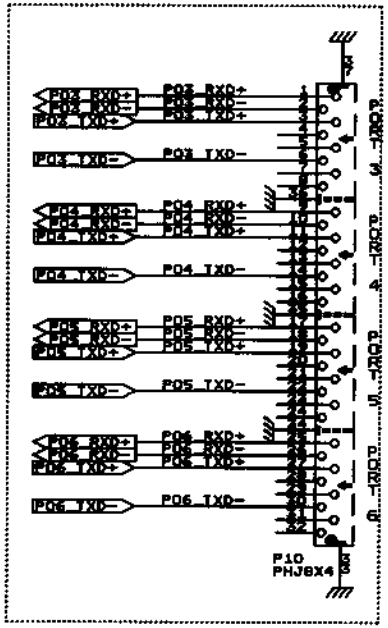

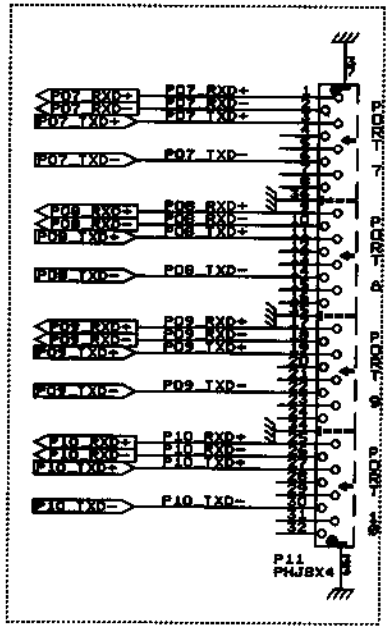

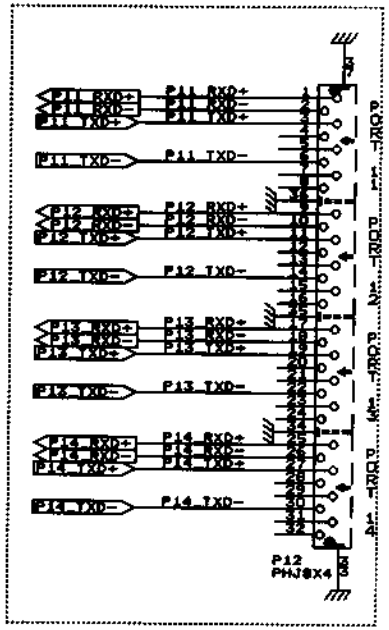

High Speed Signal:
ALL

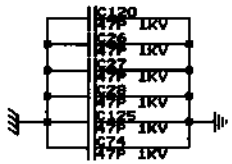

(14) Phone-Jack RJ-45

D-Link Corp.	Approved:	Prepared : Cheer Ko	
	Checked:	Issued Date: 10/13/96	
DOC. NO.: 305DES815----A2-	Version: A	Title: TI-Based Ether-Switch ---- ES-815B	
		Size: B Document Number: 2100 2200	REV: A2
		Date: April 2, 1997 Sheet 14 of 23	

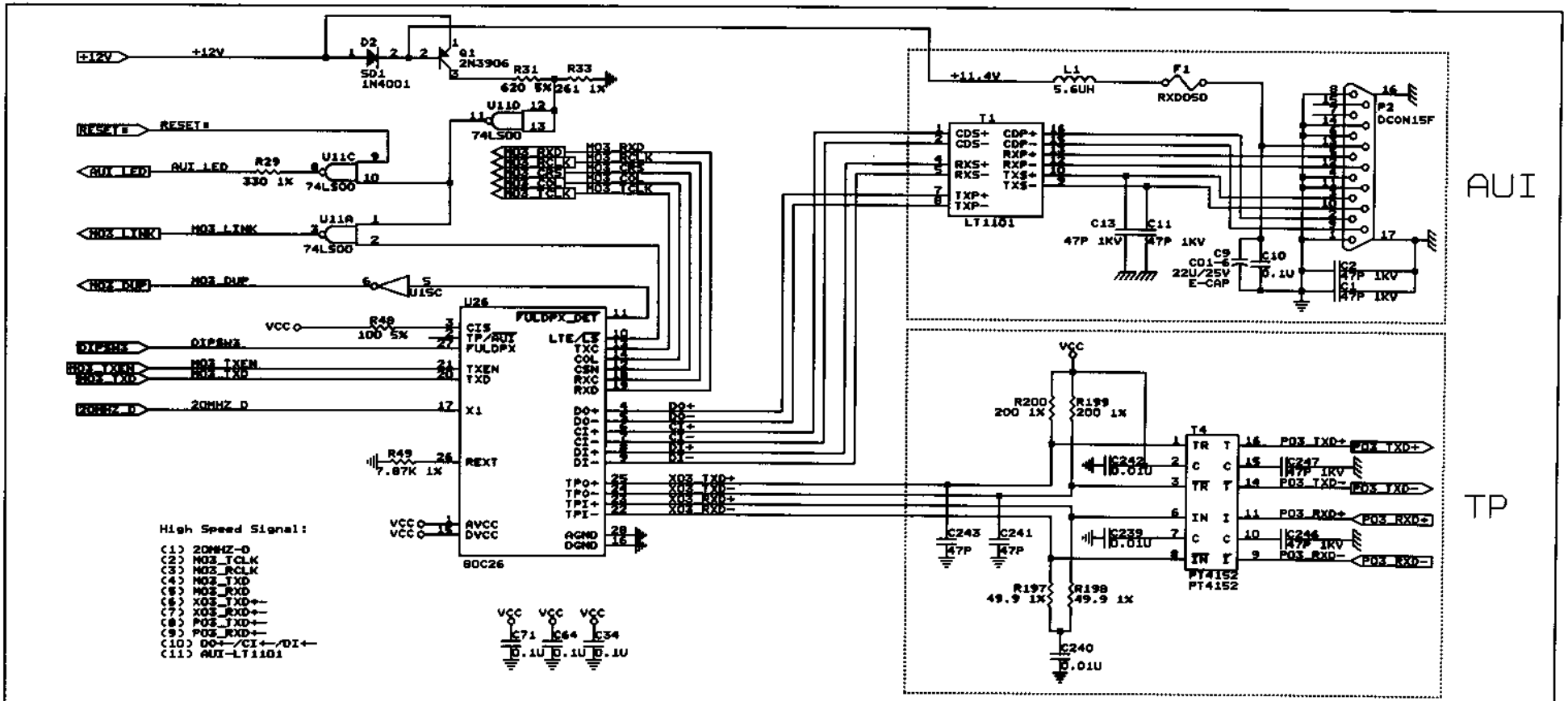

(15) 10Mbps port 3: AUI/TP

D-Link Corp.	Approved:	Prepared : Cheer Ko	
	Checked:	Issued Date: 10/13/96	
DOC. NO.: 305DES815----A2-	Version: A	Title: TI-Based Ether-Switch —— ES-8158	
		Size: B Document Number: 2100 2200	REV: A2
		Date: April 7, 1997 Sheet 15 of 23	

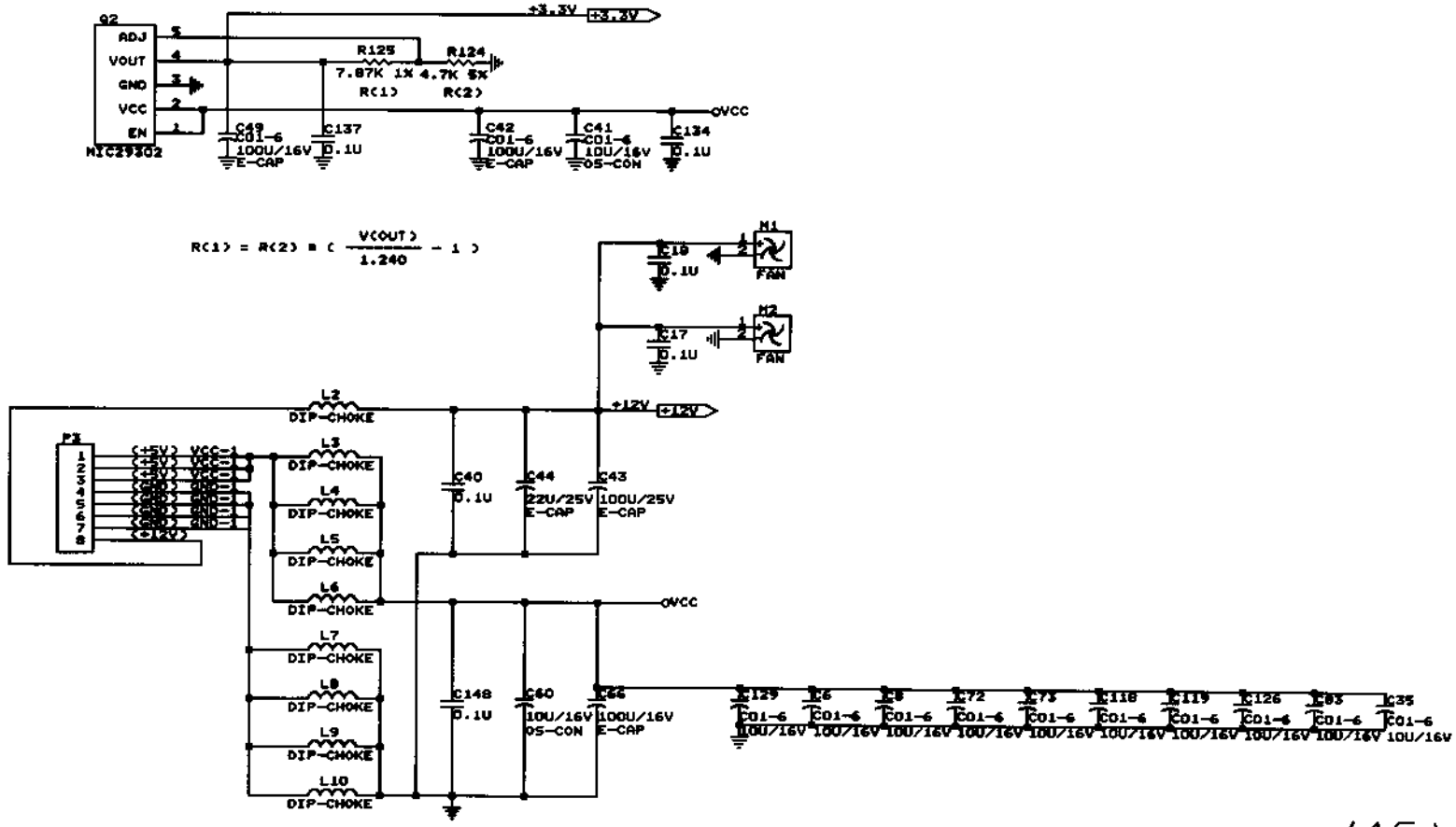

(16) POWER

D-Link Corp.	Approved:	11/6/97	Prepared : Cheer Ko 葛其永
	Checked:	97.11.6	Issued Date: 10/13/96
DOC. NO.: 305DES815----A2-	Version: A		Title: TI-Based Ether-Switch ---- ES-8158
			Size: B Document Number 2100 2200 REV A2
			Date: April 2, 1997 Sheet 16 of 23

17/85

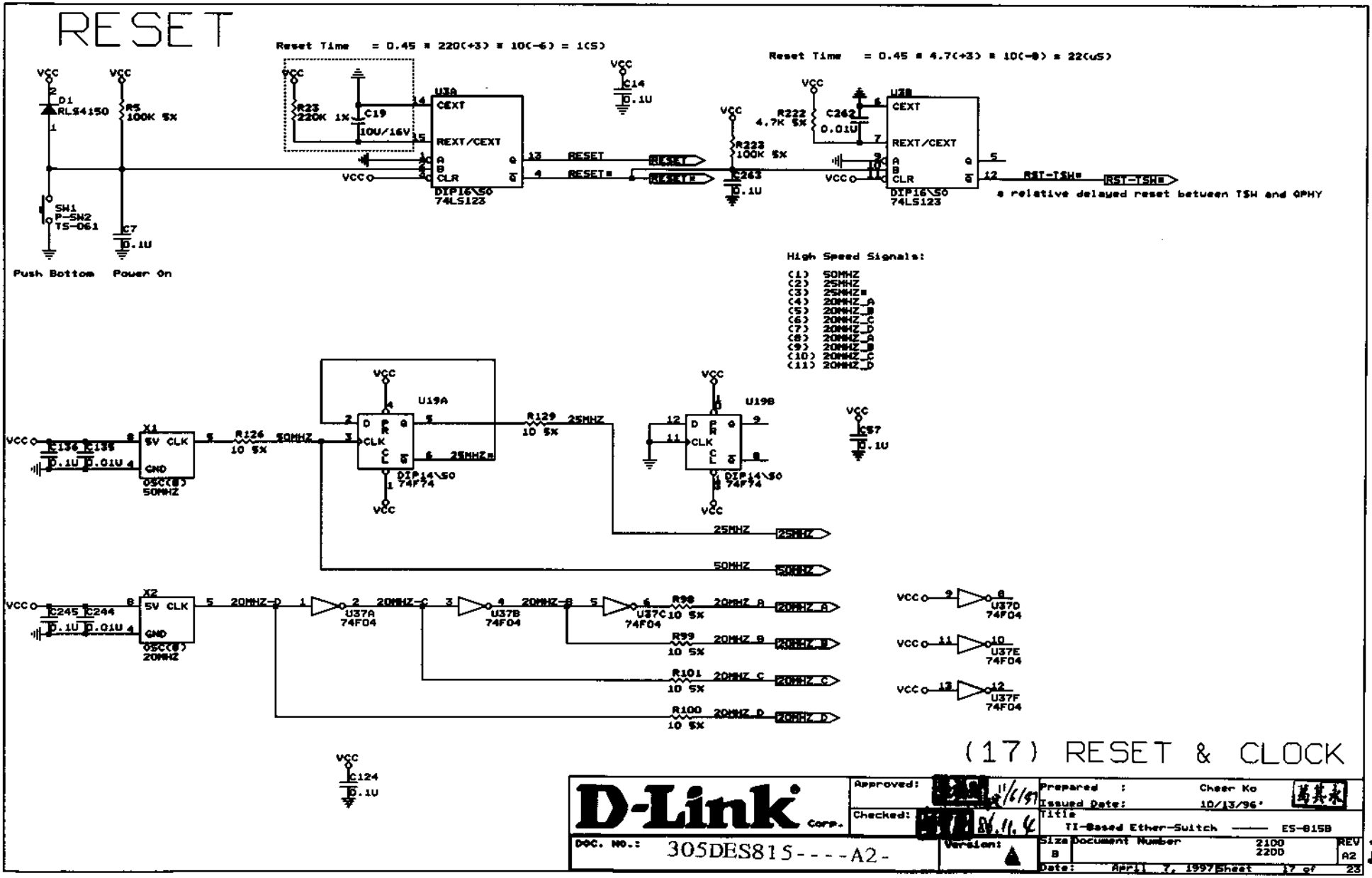
RESET
Reset Time = 0.45 * 220(+3) * 10(-6) = 1(S)
Reset Time = 0.45 * 4.7(+3) * 10(-8) = 22(uS)
a relative delayed reset between TSW and QPHY
Push Button Power On
High Speed Signals:
(1) 50MHZ
(2) 25MHZ
(3) 25MHZ*
(4) 20MHZ_A
(5) 20MHZ_B
(6) 20MHZ_C
(7) 20MHZ_D
(8) 20MHZ_A
(9) 20MHZ_B
(10) 20MHZ_C
(11) 20MHZ_D
(17) RESET & CLOCK
D-Link Corp.
Approved:
Checked:
Prepared : Cheer Ko
Issued Date: 10/13/96
Title TI-Based Ether-Switch —— ES-815B
DOC. NO.: 305DES815----A2-
Version: A
Size B
Document Number 2100 2200
REV A2
Date: April 7, 1997 Sheet 17 of 23

18/26

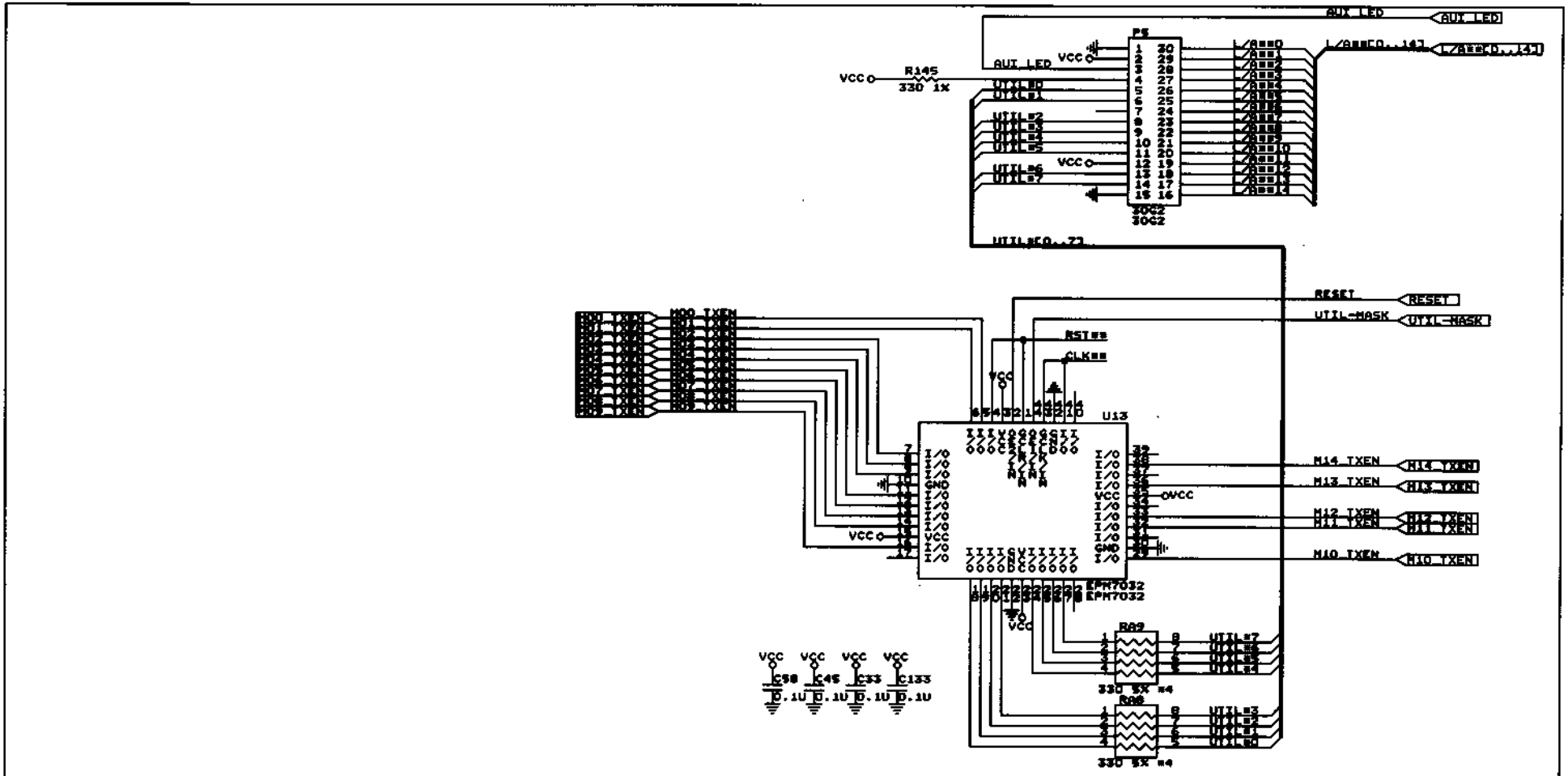

(Traffic)

(18) DISPLAY-1

D-Link Corp.	Approved:	Prepared : Cheer Ko	
	Checked:	Issued Date: 10/13/96'	
		Title: TI-Based Ether-Switch —— ES-8158	
DOC. NO.: 305DES815----A2-	Version: A	Size: B Document Number: 2100 2200	REV: A2
		Date: April 7, 1997 Sheet 18 of 23	

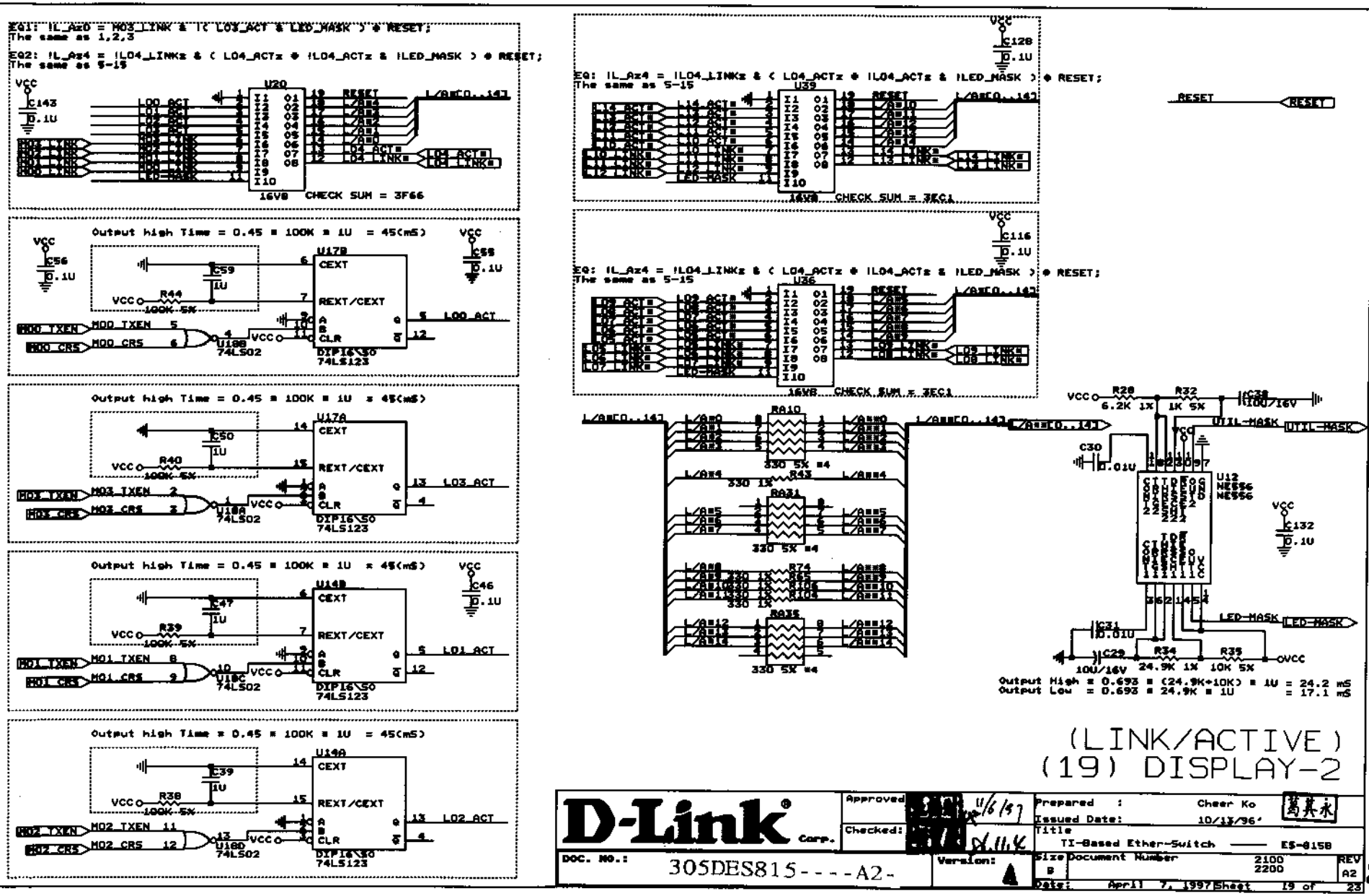

(LINK/ACTIVE)
(19) DISPLAY-2

D-Link Corp.	Approved:	Prepared : Cheer Ko	
	Checked:	Issued Date: 10/13/96'	
DOC. NO.: 305DES815----A2-	Version: A	Title: TI-Based Ether-Switch —— ES-815B	
		Size: B Document Number: 2100 2200	REV: A2
		Date: April 7, 1997 Sheet 19 of 23	

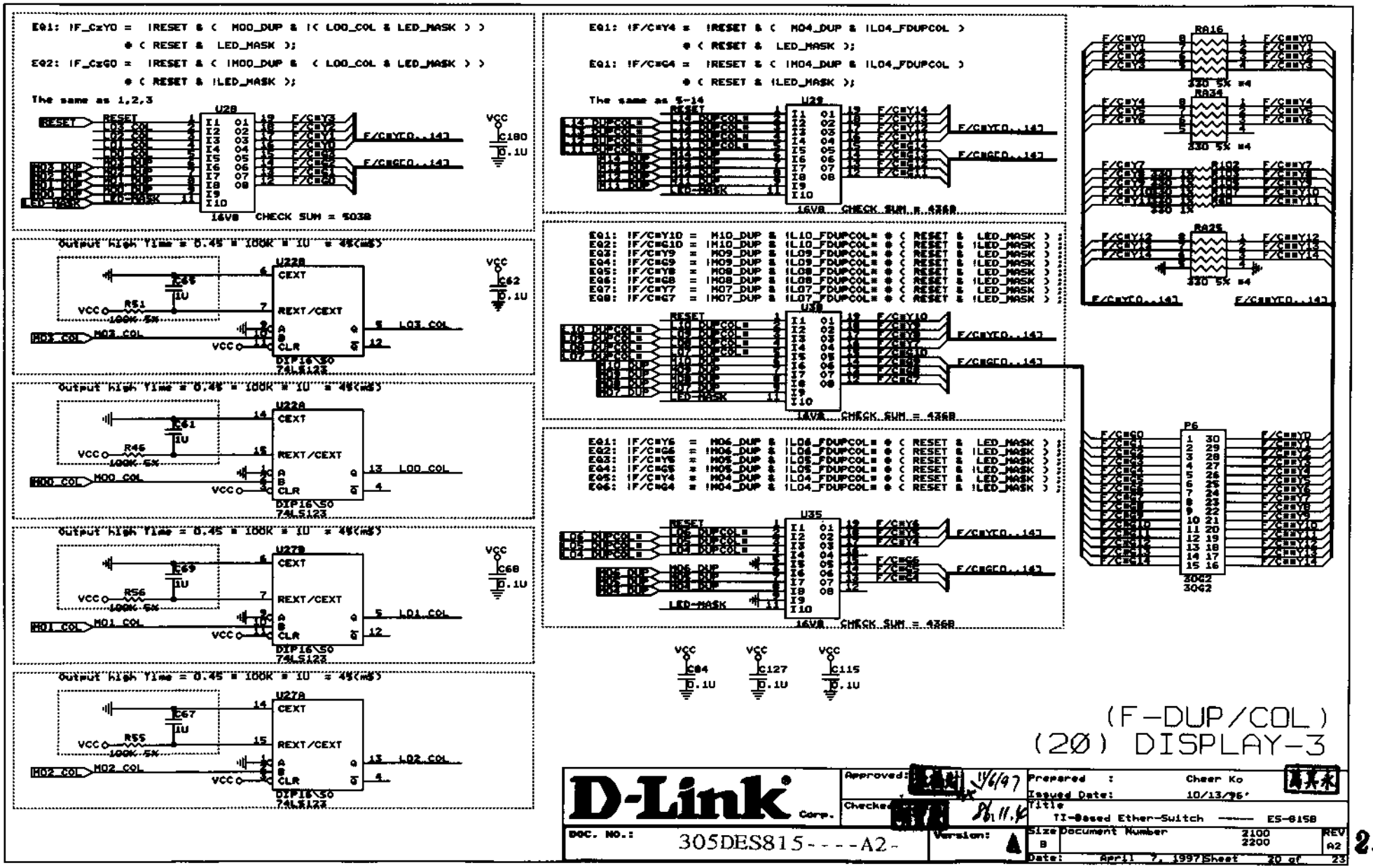
EQ1: !F_CzY0 = !RESET & (M00_DUP & !(L00_COL & LED_MASK))
(RESET & LED_MASK);
EQ2: !F_CzG0 = !RESET & (!M00_DUP & (L00_COL & LED_MASK))
(RESET & !LED_MASK);
The same as 1,2,3
U28
16V8 CHECK SUM = 503B
Output high Time = 0.45 * 100K * 1U = 45(mS)
U22B
U22A
U27B
U27A
DIP16\S0
74LS123
EQ1: !F/C*Y4 = !RESET & (M04_DUP & !L04_FDUPCOL)
(RESET & LED_MASK);
EQ1: !F/C*G4 = !RESET & (!M04_DUP & !L04_FDUPCOL)
(RESET & !LED_MASK);
The same as 5-14
U29
16V8 CHECK SUM = 436B
EQ1: !F/C*Y10 = M10_DUP & !L10_FDUPCOL* # (RESET & LED_MASK) ;
EQ2: !F/C*G10 = !M10_DUP & !L10_FDUPCOL* # (RESET & !LED_MASK) ;
EQ3: !F/C*Y9 = M09_DUP & !L09_FDUPCOL* # (RESET & LED_MASK) ;
EQ4: !F/C*G9 = !M09_DUP & !L09_FDUPCOL* # (RESET & !LED_MASK) ;
EQ5: !F/C*Y8 = M08_DUP & !L08_FDUPCOL* # (RESET & LED_MASK) ;
EQ6: !F/C*G8 = !M08_DUP & !L08_FDUPCOL* # (RESET & !LED_MASK) ;
EQ7: !F/C*Y7 = M07_DUP & !L07_FDUPCOL* # (RESET & LED_MASK) ;
EQ8: !F/C*G7 = !M07_DUP & !L07_FDUPCOL* # (RESET & !LED_MASK) ;
U30
16V8 CHECK SUM = 436B
EQ1: !F/C*Y6 = M06_DUP & !L06_FDUPCOL* # (RESET & LED_MASK) ;
EQ2: !F/C*G6 = !M06_DUP & !L06_FDUPCOL* # (RESET & !LED_MASK) ;
EQ3: !F/C*Y5 = M05_DUP & !L05_FDUPCOL* # (RESET & LED_MASK) ;
EQ4: !F/C*G5 = !M05_DUP & !L05_FDUPCOL* # (RESET & !LED_MASK) ;
EQ5: !F/C*Y4 = M04_DUP & !L04_FDUPCOL* # (RESET & LED_MASK) ;
EQ6: !F/C*G4 = !M04_DUP & !L04_FDUPCOL* # (RESET & !LED_MASK) ;
U35
16V8 CHECK SUM = 436B
RA16
RA34
RA25
P6
30G2
VCC
C180
C62
C68
C84
C127
C115
0.1U
(F-DUP/COL)
(20) DISPLAY-3
D-Link Corp.
Approved:
Checked:
Prepared : Cheer Ko
Issued Date: 10/13/96
Title TI-Based Ether-Switch ---- ES-815B
DOC. NO.: 305DES815----A2-
Version:
Size B
Document Number 2100 2200
REV A2
Date: April 7, 1997
Sheet 20 of 23

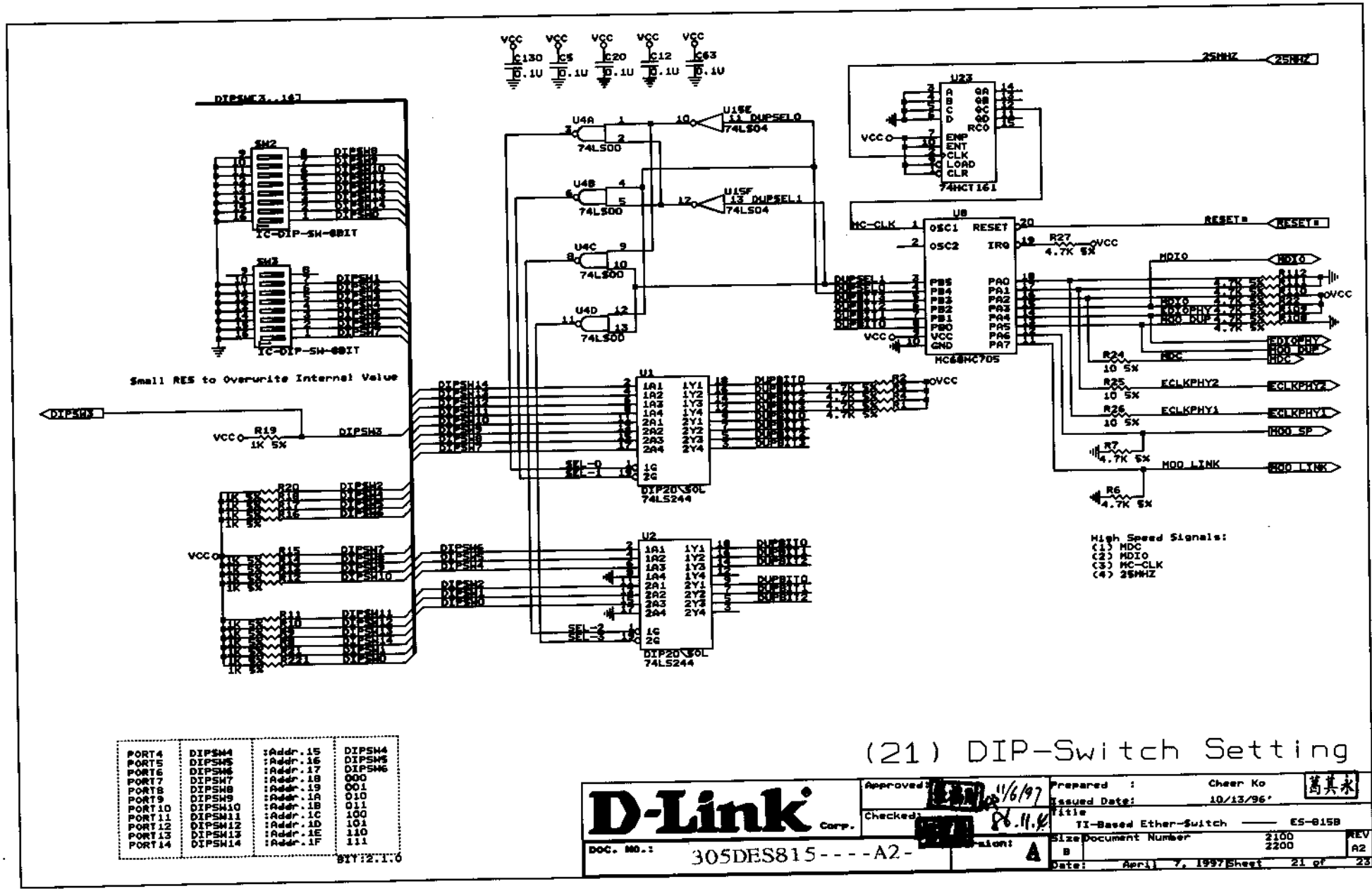

PORT4	DIPSW4	:Addr.15	DIPSW4
PORT5	DIPSW5	:Addr.16	DIPSW5
PORT6	DIPSW6	:Addr.17	DIPSW6
PORT7	DIPSW7	:Addr.18	000
PORT8	DIPSW8	:Addr.19	001
PORT9	DIPSW9	:Addr.1A	010
PORT10	DIPSW10	:Addr.1B	011
PORT11	DIPSW11	:Addr.1C	100
PORT12	DIPSW12	:Addr.1D	101
PORT13	DIPSW13	:Addr.1E	110
PORT14	DIPSW14	:Addr.1F	111

BIT:2.1.0

(21) DIP-Switch Setting

D-Link Corp.

Approved:	11/6/97	Prepared :	Cheer Ko
Checked:	96.11.6	Issued Date:	10/13/96'
DOC. NO.:	305DES815----A2-	Version:	A

Title: TI-Based Ether-Switch —— ES-815B

Size: B | Document Number: 2100 2200 | REV: A2

Date: April 7, 1997 | Sheet 21 of 23

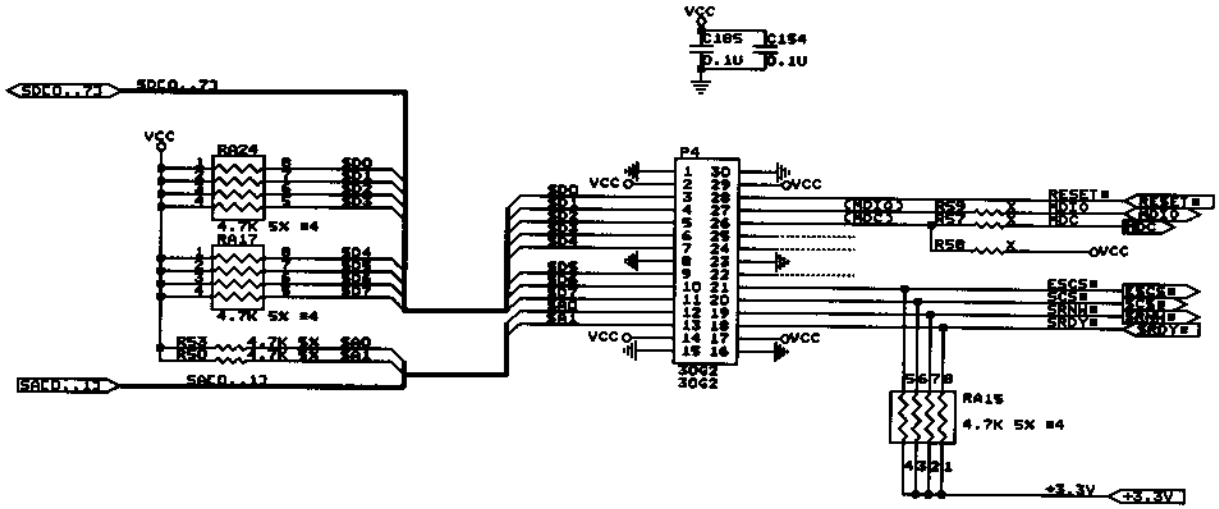

(22) Parallal Port

D-Link Corp.	Approved:	11/6/97	Prepared : Cheer Ko
	Checked:	96.11.6	Issued Date: 10/15/96
DOC. NO.: 305DES815----A2-	Version: A		Title: TI-Based Ether-Switch —— ES-815B
			Size: B Document Number: 2100 2200 REV: A2
			Date: April 7, 1997 Sheet 22 of 23

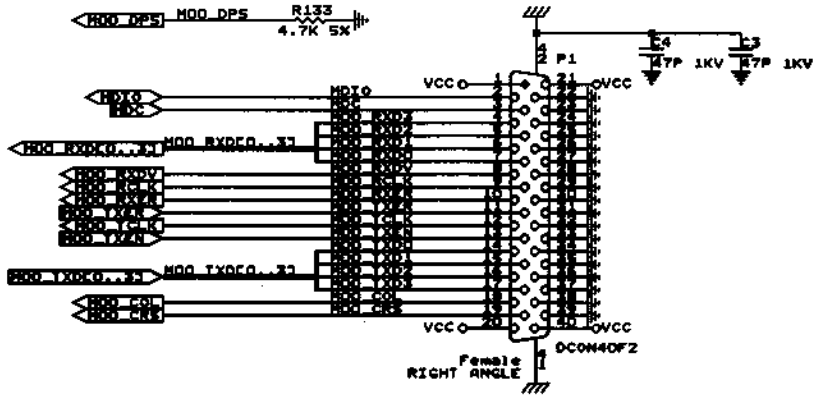

(23) MII Connector

D-Link Corp.

Approved:		11/6/97	Prepared : Cheer Ko
Checked:		96.11.6	Issued Date: 10/13/96
			Title: TI-Based Ether-Switch ----- ES-8158
DOC. NO.:	305DES815----A2-	Version:	Size: B; Document Number: 2100 2200; REV: A2
			Date: April 2, 1997 Sheet 23 of 23

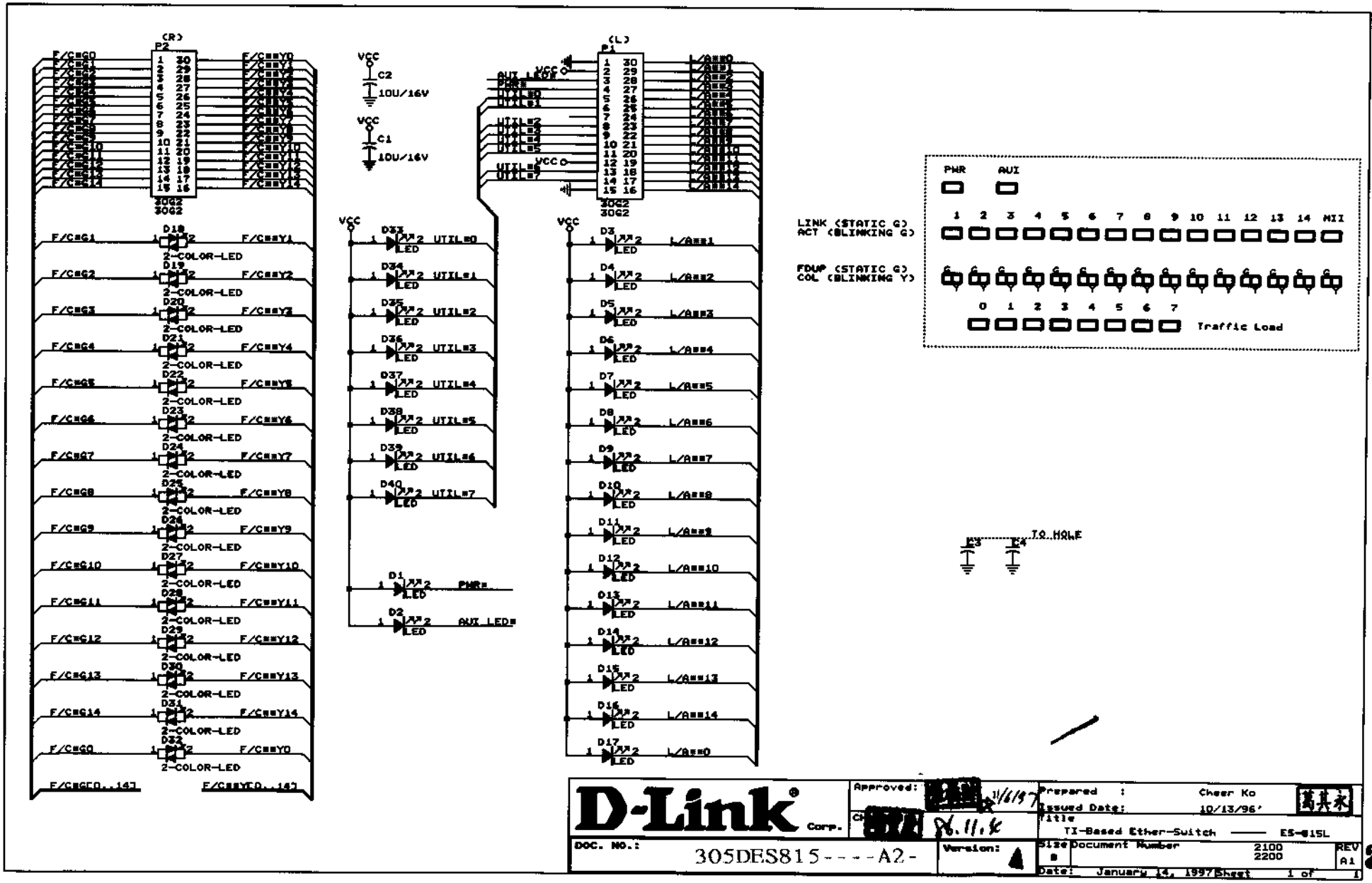
(R)
P2
(L)
P1
VCC
C2
10U/16V
C1
10U/16V
2-COLOR-LED
LED
PWR
AUI
LINK (STATIC G)
ACT (BLINKING G)
FDUP (STATIC G)
COL (BLINKING Y)
Traffic Load
TO_HOLE
C3
C4
D-Link
Corp.
Approved:
Prepared : Cheer Ko
Issued Date: 10/13/96'
Title
TI-Based Ether-Switch —— ES-815L
DOC. NO.:
305DES815----A2-
Version:
Size
Document Number
2100
2200
REV
A1
Date: January 14, 1997 Sheet 1 of 1