# DES-608M
# Flex-Media Ethernet Switch
# User's Guide

Rev. 02 (November, 1996)

6DES608M..02

Printed In Taiwan

RECYCLABLE

# Wichtige Sicherheitshinweise

1. Bitte lesen Sie sich diese Hinweise sorgfältig durch.
2. Heben Sie diese Anleitung für den spätern Gebrauch auf.
3. Vor jedem Reinigen ist das Gerät vom Stromnetz zu trennen. Vervenden Sie keine Flüssig- oder Aerosolreiniger. Am besten dient ein angefeuchtetes Tuch zur Reinigung.
4. Um eine Beschädigung des Gerätes zu vermeiden sollten Sie nur Zubehörteile verwenden, die vom Hersteller zugelassen sind.
5. Das Gerät is vor Feuchtigkeit zu schützen.
6. Bei der Aufstellung des Gerätes ist auf sichern Stand zu achten. Ein Kippen oder Fallen könnte Verletzungen hervorrufen. Verwenden Sie nur sichere Standorte und beachten Sie die Aufstellhinweise des Herstellers.
7. Die Belüftungsöffnungen dienen zur Luftzirkulation die das Gerät vor Überhitzung schützt. Sorgen Sie dafür, daß diese Öffnungen nicht abgedeckt werden.
8. Beachten Sie beim Anschluß an das Stromnetz die Anschlußwerte.
9. Die Netzanschlußsteckdose muß aus Gründen der elektrischen Sicherheit einen Schutzleiterkontakt haben.
10. Verlegen Sie die Netzanschlußleitung so, daß niemand darüber fallen kann. Es sollete auch nichts auf der Leitung abgestellt werden.
11. Alle Hinweise und Warnungen die sich am Geräten befinden sind zu beachten.
12. Wird das Gerät über einen längeren Zeitraum nicht benutzt, sollten Sie es vom Stromnetz trennen. Somit wird im Falle einer Überspannung eine Beschädigung vermieden.
13. Durch die Lüftungsöffnungen dürfen niemals Gegenstände oder Flüssigkeiten in das Gerät gelangen. Dies könnte einen Brand bzw. Elektrischen Schlag auslösen.
14. Öffnen Sie niemals das Gerät. Das Gerät darf aus Gründen der elektrischen Sicherheit nur von authorisiertem Servicepersonal geöffnet werden.
15. Wenn folgende Situationen auftreten ist das Gerät vom Stromnetz zu trennen und von einer qualifizierten Servicestelle zu überprüfen:
    - a– Netzkabel oder Netzstecker sint beschädigt.
    - b– Flüssigkeit ist in das Gerät eingedrungen.
    - c– Das Gerät war Feuchtigkeit ausgesetzt.
    - d– Wenn das Gerät nicht der Bedienungsanleitung ensprechend funktioniert oder Sie mit Hilfe dieser Anleitung keine Verbesserung erzielen.
    - e– Das Gerät ist gefallen und/oder das Gehäuse ist beschädigt.
    - f– Wenn das Gerät deutliche Anzeichen eines Defektes aufweist.
16. Bei Reparaturen dürfen nur Orginalersatzteile bzw. den Orginalteilen entsprechende Teile verwendet werden. Der Einsatz von ungeeigneten Ersatzteilen kann eine weitere Beschädigung hervorrufen.
17. Wenden Sie sich mit allen Fragen die Service und Repartur betreffen an Ihren Servicepartner. Somit stellen Sie die Betriebssicherheit des Gerätes sicher.

## WARRANTIES EXCLUSIVE

IF THE D-LINK PRODUCT DOES NOT OPERATE AS WARRANTED ABOVE, THE CUSTOMER'S SOLE REMEDY SHALL BE, AT D-LINK'S OPTION, REPAIR OR REPLACEMENT. THE FOREGOING WARRANTIES AND REMEDIES ARE EXCLUSIVE AND ARE IN LIEU OF ALL OTHER WARRANTIES, EXPRESSED OR IMPLIED, EITHER IN FACT OR BY OPERATION OF LAW, STATUTORY OR OTHERWISE, INCLUDING WARRANTIES OF MERCHANTABILITY AND FITNESS FOR A PARTICULAR PURPOSE. D-LINK NEITHER ASSUMES NOR AUTHORIZES ANY OTHER PERSON TO ASSUME FOR IT ANY OTHER LIABILITY IN CONNECTION WITH THE SALE, INSTALLATION MAINTENANCE OR USE OF D-LINK'S PRODUCTS

D-LINK SHALL NOT BE LIABLE UNDER THIS WARRANTY IF ITS TESTING AND EXAMINATION DISCLOSE THAT THE ALLEGED DEFECT IN THE PRODUCT DOES NOT EXIST OR WAS CAUSED BY THE CUSTOMER'S OR ANY THIRD PERSON'S MISUSE, NEGLECT, IMPROPER INSTALLATION OR TESTING, UNAUTHORIZED ATTEMPTS TO REPAIR, OR ANY OTHER CAUSE BEYOND THE RANGE OF THE INTENDED USE, OR BY ACCIDENT, FIRE, LIGHTNING OR OTHER HAZARD.

## LIMITATION OF LIABILITY

IN NO EVENT WILL D-LINK BE LIABLE FOR ANY DAMAGES, INCLUDING LOSS OF DATA, LOSS OF PROFITS, COST OF COVER OR OTHER INCIDENTAL, CONSEQUENTIAL OR INDIRECT DAMAGES ARISING OUT THE INSTALLATION, MAINTENANCE, USE, PERFORMANCE, FAILURE OR INTERRUPTION OF A D- LINK PRODUCT, HOWEVER CAUSED AND ON ANY THEORY OF LIABILITY. THIS LIMITATION WILL APPLY EVEN IF D-LINK HAS BEEN ADVISED OF THE POSSIBILITY OF SUCH DAMAGE.

IF YOU PURCHASED A D-LINK PRODUCT IN THE UNITED STATES, SOME STATES DO NOT ALLOW THE LIMITATION OR EXCLUSION OF LIABILITY FOR INCIDENTAL OR CONSEQUENTIAL DAMAGES, SO THE ABOVE LIMITATION MAY NOT APPLY TO YOU.

# Limited Warranty

## Hardware:

D-Link warrants its hardware products to be free from defects in workmanship and materials, under normal use and service, for the following lengths of time from the date of purchase from D-Link or its Authorized Reseller:

| Product Type | Warranty Period |
|---|---|
| Network adapters | Lifetime |
| Unmanaged and managed hubs (10Mbps) | Lifetime * |
| Unmanaged and managed hubs (100Mbps) | One year |
| Repeaters, MAUs , transceivers, media converters | One year |
| Concentrators | One year |
| Internetworking products | One year |
| * Power supply and fans in these devices | One year |
| Other hardware products | One year |
| Spare parts and spare kits | 90 days |

If a product does not operate as warranted during the applicable warranty period, D-Link shall, at its option and expense, (1) repair the defective product or part, (2) deliver to Customer an equivalent product or part to replace the defective item. All products that are replaced will become the property of D-Link. Replacement products may be new or reconditioned. Any replaced or repaired product or part has a ninety (90) day warranty or the remainder of the initial warranty period, whichever is longer.

D-Link shall not be responsible for any software, firmware, information, or memory data of Customer contained in, stored on, or integrated with any products returned to D-Link pursuant to any warranty.

All products with lifetime warranty have a standard five-year warranty. To qualify for lifetime warranty, the enclosed Product Registration Card must be completed and returned to D-Link within ninety (90) days of purchase.

Warranty service may be obtained by contacting a D-Link office within the applicable warranty period for a Return Material Authorization (RMA) number. If a Registration Card has not been previously sent, proof of purchase, such as a copy of the dated purchase invoice, must be provided. Once an RMA number is issued, the defective product must be shipped back to D-Link prepaid, insured and wrapped in the original or similar shipping package to ensure that it will not be damaged during shipment. When returning the defective product to D-Link for service, the RMA number must be marked on the outside of the shipping package. Any product returned without an RMA number shall be rejected and sent back to the Customer, and D-Link reserves the right to have Customer bear the cost of sending back such products. A service charge may or may not be levied to Customer by D-Link. To find out if a service charge is levied or not, and the charged amount, read the RMA that is returned to Customer, or ask the D-Link office when an RMA is requested.

## Software:

D-Link warrants that the software programs licensed from it will perform in substantial conformance to the applicable published program specifications for a period of ninety (90) days from the date of purchase from D-Link or its Authorized Reseller. D-Link warrants the magnetic media containing software against failure during the warranty period. No updates are provided. D-Link's sole obligation hereunder shall be to replace any defective software products with products which substantially conform to D-Link's applicable published specifications. Customer assumes responsibility for the selection of the appropriate applications program and associated reference materials. D-Link makes no warranty that its software products will work in combination with any hardware or applications software products provided by third party, that the operation of the software products will be uninterrupted or error free, or that all defects in the software product will be corrected. For any third party products listed in the D-Link software product documentation or specifications as being compatible, D-Link will make reasonable efforts to provide compatibility, except where the non-compatibility is caused by "bug" or defect in the third party's product.

Warranty service for software products may be obtained by contacting a D-Link office within the warranty period. Where no Product Registration Card has been sent by Customer, proof of purchase, such as a copy of the dated purchased invoice, must be provided.

## For Warranty Service:

To obtain an RMA number for warranty service, contact the D-Link office nearest you. A list of contact addresses for D-Link's international offices is found in the back of this User's Guide. Your Warranty Registration Card should also be sent to your regional D-Link office.

## Trademarks

Copyright ©1996 D-Link Corporation.
Contents subject to change without prior notice.
D-Link is a registered trademark of D-Link Corporation/D-Link Systems, Inc.

All other trademarks belong to their respective proprietors.

## Copyright Statement

No part of this publication may be reproduced in any form or by any means or used to make any derivative such as translation, transformation, or adaptation without permission from D-Link Corporation/D-Link Systems Inc., as stipulated by the United States Copyright Act of 1976.

## FCC Warning

This equipment has been tested and found to comply with the limits for a Class A digital device, pursuant to Part 15 of the FCC Rules. These limits are designed to provide reasonable protection against harmful interference when the equipment is operated in a commercial environment. This equipment generates, uses, and can radiate radio frequency energy and, if not installed and used in accordance with this user's guide, may cause harmful interference to radio communications. Operation of this equipment in a residential area is likely to cause harmful interference in which case the user will be required to correct the interference at his own expense.

## CE Mark Warning

This is a Class A product. In a domestic environment, this product may cause radio interference in which case the user may be required to take adequate measures.

注意
この装置は、情報処理装置等電波障害自主規制協議会(VCCI)の基準に基づく第一種情報技術装置です。この装置を家庭環境で使用すると電波妨害を引き起こすことがあります。この場合には使用者が適切な対策を講ずるよう要求されることがあります。

# TABLE OF CONTENTS

**ABOUT THIS GUIDE** ..... **1**

*Terms* ..... *1*

*Overview of the User's Guide* ..... *1*

**PRODUCT OVERVIEW** ..... **3**

**UNPACKING AND COMPONENT IDENTIFICATION** ..... **6**

*Unpacking* ..... *6*

*Identifying External Components* ..... *7*

Front Panel ..... 7

Indicator Panel ..... 8

Rear Panel ..... 10

**INSTALLATION** ..... **12**

*Site Installation* ..... *12*

Installation Notes ..... 12

Rack Mounting ..... 13

*Port Module Installation* ..... *15*

*RAM Installation* ..... *17*

*Connecting Power* ..... *19*

Replacing the Fuse ..... 20

**MAKING NETWORK CONNECTIONS** ..... **22**

*Network Design Notes* ..... *22*
Node Connections ..... 22
Address Limitations ..... 23
Cable Limitations ..... 24
Congestion Control Mechanism ..... 24
*Making Twisted-Pair Attachments* ..... *25*
*Making Thin Coaxial Attachments* ..... *27*
*Making Fiber Attachments* ..... *30*

**TECHNICAL SPECIFICATIONS ..... 32**

**CABLES AND CONNECTORS ..... 35**
*10BASE-T Twisted-Pair Cable* ..... *35*
*10BASE2 Thin Coaxial Cable* ..... *36*
*10BASE-FL Fiber-Optic Cable* ..... *36*

**SLIDE-IN PORT MODULES ..... 37**
*DES-168T* ..... *37*
*DES-168C* ..... *38*
*DES-168F* ..... *39*

# ABOUT THIS GUIDE

This guide discusses how to install the D-Link's DES-608M Flex-Media 10Mbps Ethernet Switch, work with its panels, upgrade buffer size, and make network connections.

## Terms

For simplicity, this documentation uses the terms "Switch" (first letter upper case) to refer to the DES-608M Flex-Media Ethernet Switch, and "switch" (first letter lower case) to refer to all Ethernet switches, including the DES-608M.

## Overview of the User's Guide

- Chapter 1, *Product Overview*. Describes the Switch and its out-standing features.
- Chapter 2, *Unpacking and Component Identification*. Provides information on system unpacking and description of various external components of the Switch.
- Chapter 3, *Installation*. Describes the Switch installation pro-cedure including site installation, port module installation, installing RAM chips, connecting power, and replacing the system fuse.

- Chapter 4, *Making Network Connections*. Provides information on making connections to various network devices such as workstations, repeaters, and switches.

- Appendix A, *Technical Specifications*. Lists the technical specifications of the Switch.

- Appendix B, *Cables and Connectors*. Provides specifications on cables and connectors.

- Appendix C, *Slide-in Port Modules*. Describes the various sli-de-in port modules that are supported by the Switch.

# 1

# PRODUCT OVERVIEW

The Switch is a modularized 10Mbps Ethernet switch that offers users the ability to configure the number of network ports, the port types, and the expansion buffers to meet all media requirements and servers' high throughput.

The Switch provides four expansion slots, each of which supports one slide-in port module with two network ports. Ports can vary from ordinary twisted-pair ports to BNC or fiber-optic ports depending on the installed modules. With these modules, you can configure the Switch to provide a maximum of eight switched Ethernet ports connecting to various network media.

Another outstanding feature the Switch provides is queue buffer expansion. This feature allows you to upgrade the queue buffers on the first slot by installing RAM chips on the system board. This feature is particularly useful when connecting to network servers which require more buffers for processing outstanding packets.

By adding the Switch to your existing bandwidth-constricted 10Mbps Ethernet network, you can dramatically increase your available Ethernet bandwidth.

The following lists the other features of the Switch:

- Bandwidth Boost

The Switch segments up a workgroup to eliminate unnecessary traffic, multiply the available bandwidth, and relieve congestion on server paths.

- Eight User-Configurable Ports

  The Switch provides four expansion slots for installation of up to eight switched network ports, which can be any combination of BNC, 10BASE-T, or fiber-optic.

- Queue Buffer Expansion

  For network segments with heavy traffic such as server links, sockets are provided on the system board for installation of additional RAM chips to increase the buffer size of ports 1 and 2, allowing them to be configured as fast server data pipes.

- Easy Installation

  Supporting all media types, auto-learning of network configuration, and requiring no configuration setting, the Switch allows workgroups to implement performance enhancement quickly and easily anywhere on the network.

- Powerful Performance

  The Switch supports wire-speed data filtering and forwarding rates, and large per-port MAC address routing table for efficient packet switching.

- No Packet Loss

  The Switch implements per-port flow control for checking unforwarded packets to prevent the queue buffers from being overrun with incoming packets. This also guarantees that no data packets are lost before reaching their destinations.

- Transmission Protocol Auto-Selection

The Switch auto-selects the port's transmission protocol that best fits a particular situation to ensure no packets are lost during heavy traffic. This feature sets the transmission protocol of a port to store-and-forward if traffic on the connected segment is heavy, or cut-through if traffic is light.

- Comprehensive LED Indicators

  LED indicators are provided to report on the status of power, bandwidth utilization for each port, and collision occurrences on the connected segments. The BNC and twisted-pair slide-in modules also provide additional indicators for reporting on port status.

2

# UNPACKING AND COMPONENT IDENTIFICATION

This chapter provides unpacking information and description on the various external components of the Switch.

## Unpacking

Open the shipping carton of the Switch and carefully unpack its contents. The carton should contain the following items:

- One Switch
- One AC power cord
- Four self-adhesive rubber feet
- Eight screws and two mounting brackets
- One hex screwdriver
- This User's Guide

Inspect the Switch and all accompanying items. If any item is damaged or missing, report the problem immediately to your D-Link dealer.

**NOTE:** *The base unit does not include any slide-in port modules. You need to purchase these modules separately from your dealer.*

# Identifying External Components

This section identifies all the major external components of the Switch. It is divided into three sections with one diagram per section. Each diagram is followed by a list of components that are found in the respective diagram. The sections are *Front Panel*, *Indicator Panel*, and *Rear Panel*.

## Front Panel

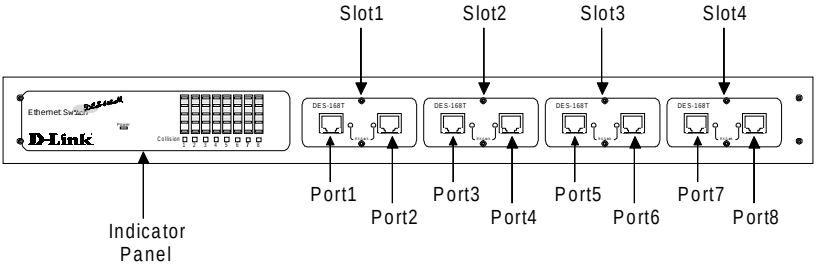


- Indicator Panel

Refer to the *Indicator Panel* section (below) to identify the different status indicators and scales.

- Slots 1 to 4

  Support the slide-in port modules. Each module provides two switched ports for maximum system configuration of eight switched ports. Depending on the installed modules, port types can vary from ordinary twisted-pair ports to BNC or fiber-optic ports. The base unit does not include any slide-in port modules to provide users the freedom to choose their system's port configuration.

  For the list of supported slide-in port modules and their respective specifications, see Appendix C, *Slide-in Port Modules*. For information on module installation, see the *Port Module Installation* section of Chapter 3, *Installation*.

# Indicator Panel

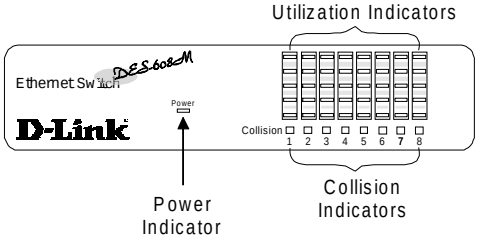


- Power Indicator

  This indicator turns on when the Switch is receiving power; otherwise, it is off. If this indicator does not light after turning on the Switch, check the system fuse. This fuse can be found inside the fuse case located just beneath the AC power connector. Pry open this case with a small flat-bladed screwdriver and replace the fuse if necessary.

- Collision Indicator

  This indicator turns on when there is data collision on the segment connected to the respective port. Packet collisions are not uncommon, and occur when two or more devices attempt to transmit data simultaneously on a network. When a collision occurs, devices pause then re-transmit after a somewhat random wait period. Because wait periods vary among devices, successive collisions become increasingly improbable.

  If the port connects to another switch or hub, collision indicators of these devices would indicate the same collision, since collisions span an entire local area network.

- Utilization Scale

  The Utilization Scale of each port reports the current traffic on the connected segment. It indicates how many percent of the total segment bandwidth of 10 Mbps is currently being utilized. A high percentage means that traffic on the segment is heavy, while a low value indicates light traffic.

  The BNC and twisted-pair slide-in port modules also provide additional LED indicators for reporting on the status of the ports. For information about these indicators, see Appendix C, *Slide-in Port Modules*.

# Rear Panel

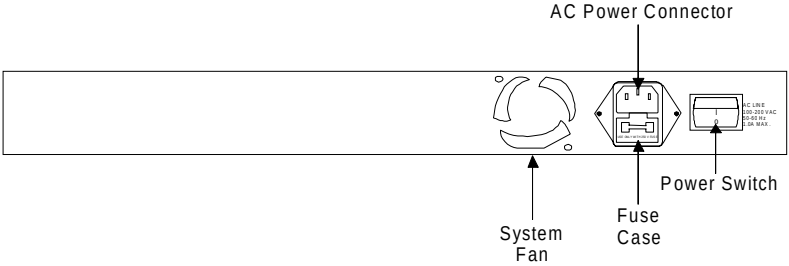


- System Fan

  This fan is used to circulate air inside the Switch and also to dissipate heat. The sides of the system also provide heat vents to serve the same purpose. Do not block these openings, and ensure to leave adequate space at the rear and sides of the Switch for proper ventilation. Be reminded that without proper heat dissipation and air circulation, system components might overheat, which could lead to system failure.

  For information on the proper way of installing the Switch, see Chapter 3, *Installation*.

- AC Power Connector

  This is a three-pronged connector that supports the power cord. Plug in the female connector of the provided power cord into this connector, and the male into a power outlet. Supported input voltages range from 100 to 240 VAC at 50/60 Hz.

- Fuse Case

  This case contains the system fuse and a spare fuse. The fuse protects the system from power surges. To access the fuse, pry open this case with a flat-bladed screwdriver.

- Power Switch

  Turns on and off the Switch. To turn on the system, slide this switch to the "1" position; to turn off, slide it to the "0" position.

# 3

# INSTALLATION

This chapter describes the installation requirements, rack mounting, installing slide-in port modules, upgrading the queue buffers on ports 1 and 2, turning on the system, and replacing the system fuse.

## Site Installation

### Installation Notes

The Switch is suited for use in the office where it can be mounted in a standard 19-inch equipment rack or placed on desktops. Alternatively, the system can be rack-mounted in a wiring closet or equipment room. A rack-mounting and desktop-mounting kit containing mounting brackets and rubber feet are supplied with the Switch.

When choosing a site for the Switch, consider the following:

- The front panel should be readily and visually accessible for cable connections and LED monitoring. The rear panel should also be easily accessible for power cable connection.

- The cables are away from sources of electrical noise such as motors, radios, and transmitters. Ensure also that they are not in close proximity with power lines and fluorescent lighting fixtures.
- The site is in a fairly cool and dry place. See Appendix A, *Technical Specifications*, for the acceptable temperature and humidity operating ranges.
- Air-flow around the system and through the heat vents on the sides of the case is not blocked. We recommend that you provide at least 25 mm (1 inch) clearance.
- No heavy objects are placed on the system.
- Install the Switch in a sturdy, level surface that can support at least the weight of the system, or in an EIA standard-size rack. For information on installing in a rack, see the next section, *Rack Mounting*.

When installing the Switch on a level surface, ensure to attach the self-adhesive rubber feet at the bottom of the device. The rubber feet act as cushioning devices.

## Rack Mounting

The Switch can be mounted in an EIA standard-size, 19-inch rack, which can be placed in a wiring closet with other equipment. To install the system in a rack, follow these steps:

1. Disconnect all cables from the system. Remove also the self-adhesive rubber feet at the bottom of the device, if already fitted.
2. Place the Switch on a flat surface with the front panel facing you.

3. Place a mounting bracket over the mounting holes on one side of the system. Ensure that the mounting holes coincide with the holes on the mounting bracket.

4. Insert the appropriate screws and tighten them with a suitable screwdriver.

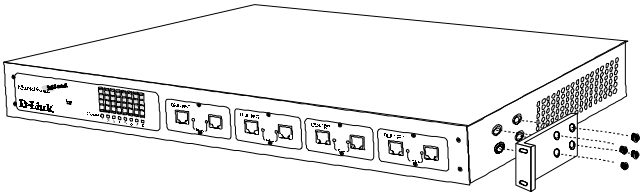

5. Repeat the same procedure to install the other mounting bracket on the other side of the Switch.

6. Insert the system in the 19-inch rack and secure it with the screws provided with the rack. Ensure that the heat vents are not obstructed.

7. Reconnect the cables.

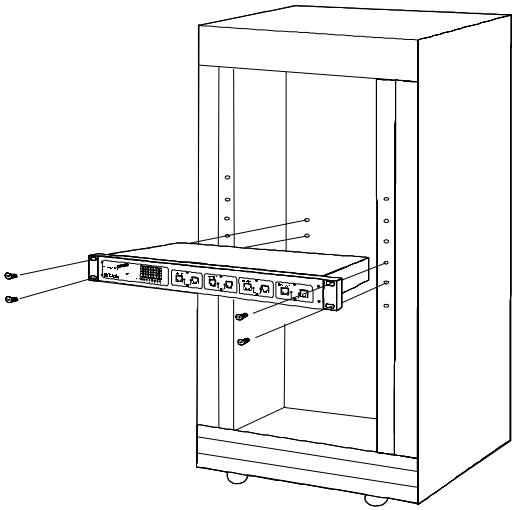

# Port Module Installation

The Switch supports various slide-in port modules which can be installed into the slots to provide interface to different network media like twisted-pair, thin coaxial cable, and fiber-optic cable. Three slide-in port modules are available for use with the Switch: DES-168T, DES-168C, and DES-168F providing RJ-45, BNC, and ST connectors, respectively. Each module comes with two switched ports, thus allowing maximum port configuration of eight switched ports.

You can install a module into any slot you want; be reminded though that the first slot is designed primarily for server connections where more buffer space is required for handling any increase in end-user demands for server accesses. This slot comes with a feature that allows you to upgrade the queue buffers (from 64 KB to 128 KB) of each port on the installed module to support server connections.

For information on buffer expansion, see the *RAM Installation* section (next). For more information about the supported slide-in port modules, see Appendix C, *Slide-in Port Modules*.

To install a module, follow these steps:

**1.** Turn off the system (if already on), and unplug it from the power outlet.

**2.** Choose a slot to install the module. When choosing a slot, take into consideration the nodes you intend to connect to the module's ports. For server connections, choose the first slot, and then upgrade the slot's queue buffers for higher performance; for other connections, select the other slots.

**3.** Remove the coverplate or module (if there is one installed) from the selected slot. Use the provided hex screwdriver to loosen and remove the screws. Set aside these screws.

**4.** Align the module with the railings on the slot, and then push the module all the way in until it locks into place.

**5.** Secure the module on the slot with the screws you removed in step 3. Use the same screwdriver to tighten the screws.

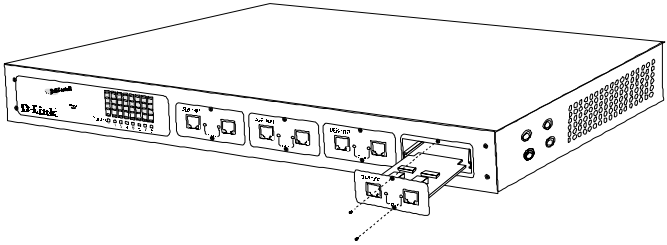


# RAM Installation

The system allocates 64 KB of memory for buffer use on each port in the system. The port uses this buffer as temporary storage of packets that can not be transmitted right away onto the connected segment or forwarded to another port due to heavy traffic on the network. These packets will remain in the buffer until traffic has dramatically eased down.

For links that demand less use of the network bandwidth such as workstation and hub (with few nodes) connections, 64 KB is more than enough to handle outstanding packets; for bandwidth-demanding links though such as server connections, this value may not be enough to handle any increase in end-user demands for server use. To deal with this problem, the Switch features buffer upgrading on slot 1. This feature allows you to upgrade the queue buffers of each port installed in slot 1 from 64 KB to 128 KB by installing RAM chips on the system board. This feature is particularly useful for server connections or other connections that demand extensive use of the network bandwidth.

The system board comes with six sockets for RAM installation, with three sockets allocated for each port. You will need to purchase the RAM chips from your D-Link dealer. These chips must have the specification 32 * 8 KB (15 ns).

To upgrade the queue buffers on ports 1 and 2 (that is, ports installed in slot 1), perform these steps:

**1.** Purchase the RAM chips from your D-Link dealer. Take note that you will need three chips to upgrade the queue buffers of each port (two chips for upgrading the buffer and one chip for buffer management).

**2.** Turn off the system (if already on), and unplug it from the power outlet.

**3.** Disconnect all cables from the system.

**4.** Remove the top cover of the system. Loosen the screws using a Phillips screwdriver. Set aside the screws.

**5.** Locate the expansion sockets on the system board. Refer to the following figure:

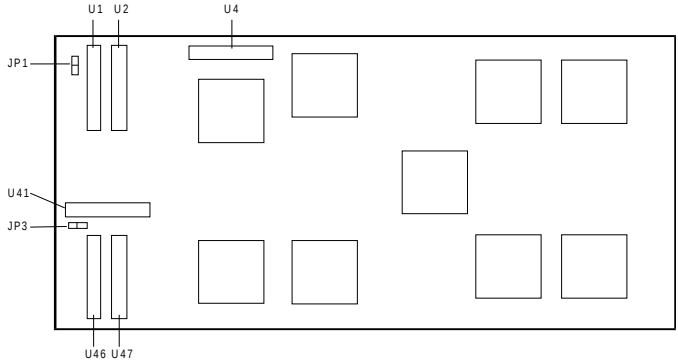


The sockets on top (that is, U1, U2, and U4) are for port 1, while the ones at the bottom (that is, U41, U46, and U47) are for port 2. When upgrading each port's queue buffers, you must install chips on these sockets.

**6.** Install the chips by performing these steps:

◊ Align the notch on the chip with that on the socket.

◊ Insert the chip into the socket.

◊ Gently push down the chip until it is completely seated on the socket.

◊ Repeat the same procedure for the other chips.

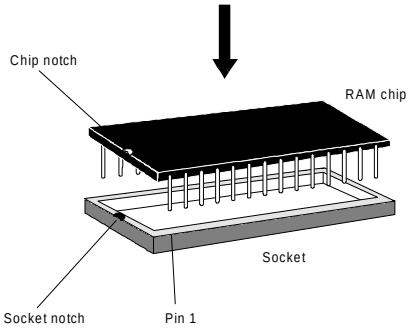


**7.** Remove the cap from the corresponding jumper of the upgraded port; that is, JP1 for port 1, and JP3 for port 2. If you have upgraded both ports, then remove the caps on both jumpers.

**8.** Replace the system cover.

**9.** Reconnect the cables.

# Connecting Power

The Switch features a power supply unit that automatically adjusts to the level of the input voltage. Supported voltage levels range from 100 to 240VAC at 50 ~ 60 Hz. Your local voltage level should fall within this range.

To turn on the Switch, plug in the provided AC power cord into the power connector at the rear of the system, then slide the rocker power switch to the "1" position. After turning on the power, the Power indicator on the front panel turns on.

It is not necessary to turn off the system when connecting or disconnecting cables; this applies to all types of connections. However, when installing, removing, or replacing system components, the power must be shut off.

# Replacing the Fuse

A 1.5A fuse protects the system's power supply unit from power surges. In case of power surge, the system fuse will be blown out, thus cutting off the connection and preventing high voltages from reaching the power supply or the other sensitive parts of the device. The fuse, plus a spare one, are contained in a fuse case located just beneath the AC power connector. When replacement becomes necessary, pry open this case with a small flat-bladed screwdriver and replace the damaged fuse. You may also purchase a new 1.5A fuse, which is readily available in most local stores.

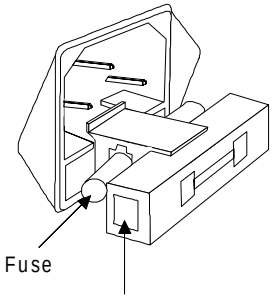


**WARNING!** *Ensure that the power is disconnected before opening the fuse case.*

*DO NOT defeat the purpose of the fuse by using a jumper (such as a wire) in place of a damaged one. Doing so, may cause serious damage to the Switch.*

# 4

# MAKING NETWORK CONNECTIONS

This chapter provides information on creating network connections to the Switch.

## Network Design Notes

When adding a Switch into your network, take into consideration the information provided in this section.

### Node Connections

There are some Ethernet switches that only support a single dedicated station per port. This prevents network designers from interconnecting shared-media hubs using this type of switches. The Switch supports connections to various types of nodes including workstations, repeaters, and switches, providing network designers a vast range of comprehensive and scaleable switched networking solution.

# Address Limitations

The Switch looks at the network configuration to forward packets. This reduces the traffic congestion on the network because instead of transmitting packets to all segments, they are only transmitted to their destinations. Example, if the Switch receives a packet destined to the segment connected to port 2, the system transmits that packet through port 2 only, and transmits nothing through the other ports.

The network configuration is made known to the system via the routing table. This table contains the MAC addresses of the nodes and the network segments to which they belong. When the system needs to forward a packet, it checks this table for the respective segment of the packet's destination MAC address, and forwards the packet only to that segment. If the destination address of the packet is not found in the routing table, the system broadcasts this packet to all connected segments.

The MAC addresses stored in the routing table are created through the learning process of the system. Each time a port receives a packet, it creates an entry in the routing table indicating the source address of the packet and the segment to which the address belongs. Also indicated is the time that has elapsed since a packet was received from that address. If this time exceeds the aging time duration (that is, 5 minutes), the entry is aged out from the table.

The routing table is created every time the system is booted up; entries are added into this table as packets come in. When you turn off the system, the routing table is deleted.

**NOTE:** *The routing table supports a maximum of 8,192 entries per port, or 32,768 entries for the whole system.*

# Cable Limitations

When connecting network devices to the Switch, you must observe some rules on the allowable segment length and cable type to maintain networks within the set specifications. The table below lists the allowable segment lengths and cable types as specified by IEEE 802.3.

| Port | Node | Maximum Segment Length | Cable Type |
|---|---|---|---|
| Twisted-Pair | Ethernet hub | 100 meters | Straight Category 3, 4, or 5 unshielded twisted-pair cable or straight 100-ohm shielded twisted-pair cable |
| Twisted-Pair | Switch/other network devices | 100 meters | Crossover Category 3, 4, or 5 unshielded twisted-pair cable or straight 100-ohm shielded twisted-pair cable |
| BNC | Any network device | 185 meters | RG58A/U 50-ohm thin coaxial cable |
| Fiber | Any network device | 2,000 meters | 62.5/125 µm multimode fiber, ST connector |

# Congestion Control Mechanism

The Switch implements the flow control and jam back congestion control mechanism to prevent the queue buffers of the ports from being overrun. Jam back is a function that discards a packet if the output buffer of the port is full. Flow control, on the other

hand, prevents a packet from being forwarded to its destination if the input buffer of the destination port is full.

# Making Twisted-Pair Attachments

You can make twisted-pair attachments to the Switch by first installing DES-168T modules. At most, you can configure the system to have a maximum of eight switched twisted-pair ports. Each of these ports supports half-duplex communication mode, which limits transmission to only one direction at a time.

Depending on the node you are connecting to a twisted-pair port, you will need either a straight or crossover twisted-pair cable. For connection to 10BASE-T hubs, you will need a straight twisted-pair cable; for connection to other network devices such as servers and switches, you will need a crossover cable. A crossover cable is almost the same as an ordinary twisted-pair cable only that the pin configuration of a crossover cable is crossed over. Maximum cable length is 100 meters.

For information on cable pin configuration, see Appendix B, *Cables and Connectors*.

**NOTE:** *You do not need to turn off the Switch when making network connections; just plug in the cables into the ports.*

To make twisted-pair attachments to the Switch, follow these steps:

1. Depending on the number of twisted-pair attachments you want to create, install the appropriate number of DES-168T

modules into the Switch. Take note that each module provides two switched twisted-pair ports. For information on the installation procedure, see the *Port Module Installation* section of Chapter 3, *Installation*.

**2.** Get hold of the cable needed in the connection; that is, straight twisted-pair cable for hub connection, crossover cable for other network devices such as servers and switches. Ensure that this cable does not exceed 100 meters.

**3.** Connect one end of the cable into a working twisted-pair port on the node, and the other end into a twisted-pair port on the Switch. If you are connecting a server or other devices that demand extensive use of the network bandwidth, we recommend that you connect this device to port 1 or port 2, then upgrade the queue buffers of the selected port for higher performance. For information on buffer upgrading, see the *RAM Installation* section of Chapter 3, *Installation*.

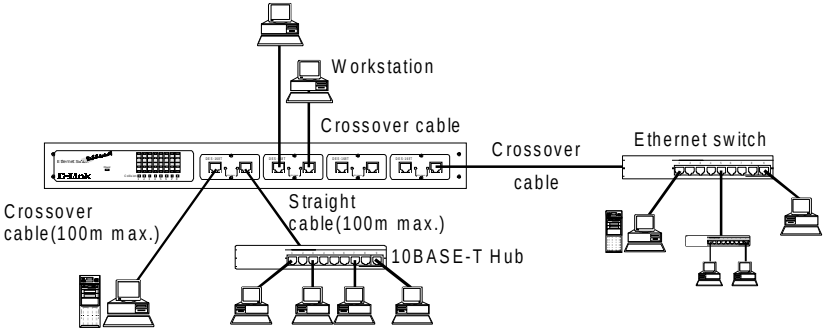


**4.** Set the communication mode of the connected node to half-duplex. Be reminded that the twisted-pair ports on the Switch only support half-duplex operations.

**5.** Repeat the same procedure to connect the other nodes.

After making the connection, the Link indicator of the port should turn on to indicate a successful link (assuming that both devices are on). For more information about the indicators on the slide-in port modules, see Appendix C, *Slide-in Port Modules*.

# Making Thin Coaxial Attachments

You can make BNC attachments to the Switch by first installing DES-168C modules. At most, you can configure the system to have a maximum of eight switched BNC ports. You will need a T-connector and thin coaxial cable to make a BNC link; a 50-ohm BNC terminator is not necessary since each BNC port can be terminated via the on-board DIP switches. Maximum cable length is 185 meters.

**NOTES:** *You do not need to turn off the Switch when making network connections; just plug in the cables into the ports.*

*When terminating a port, use either the on-board termination or a 50-ohm BNC terminator. DO NOT use both since this will cause network errors.*

To make thin coaxial attachments to the Switch, follow these steps:

1. Depending on the number of BNC attachments you want to create, install the appropriate number of DES-168C modules into the Switch. Take note that each module provides two

switched BNC ports. For information on the installation procedure, see the *Port Module Installation* section of Chapter 3, *Installation*.

2. Get hold of a thin coaxial cable. Ensure that this cable does not exceed 185 meters.

3. Select a BNC port to connect the node. If you are connecting a server or other devices that demand extensive use of the network bandwidth, we recommend that you connect this device to port 1 or port 2, then upgrade the queue buffers of the selected port for higher performance. For information on buffer upgrading, see the *RAM Installation* section of Chapter 3, *Installation*.

4. Connect a T-connector to the selected port.

5. Connect the T-connector to the thin coaxial cable. If the cable terminates at the port, enable the port's termination by sliding its respective DIP switch to the ON position, as shown in the figure below. Otherwise, leave the switch to its OFF position. The corresponding LED of the port indicates its termination status.

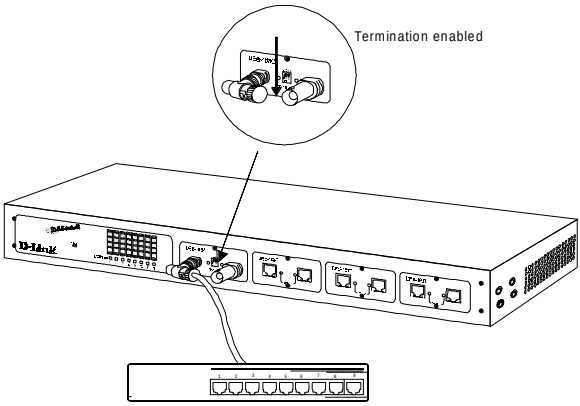


You may also use a 50-ohm BNC terminator if you wish. Be reminded though that only one of these termination methods can be used at a time.

**6.** Repeat the same procedure to connect the other nodes.

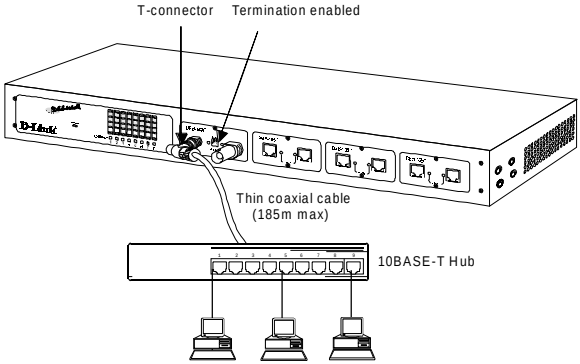


For information about the indicators on the slide-in port modules, see Appendix C, *Slide-in Port Modules*.

# Making Fiber Attachments

If the node you intend to connect is located at a remote area, you may use fiber optics to link this device to the Switch. Fiber attachment to the system is available through the DES-168F modules. These modules come with two switched fiber-optic ports, providing fiber links to remote nodes.

Each fiber-optic port on the DES-168F comes with two connectors; one for reception (Rx) and the other for transmission (Tx). They come with protective covers to protect the lens inside the connectors from dust, which could alter the intensity of light coming in and out of the port. Do not remove these protective covers unless you are ready to connect the port.

You will be needing a 62.5/125 μm multimode fiber cable in the connection. This cable can be up to 2 km long.

**NOTE:** *You do not need to turn off the Switch when making network connections; just plug the cables into the ports.*

To connect nodes to the Switch using fiber-optic cables, perform these steps:

1. Depending on the number of nodes you intend to connect, install the appropriate number of DES-168F modules into the Switch. Take note that each module provides two switched fiber-optic ports. For information on the installation procedure, see the *Port Module Installation* section of Chapter 3, *Installation*.

2. Get hold of a 62.5/125 μm multimode fiber cable. Ensure that this cable does not exceed 2 km.

3. Select a fiber-optic port to connect the node. If you are connecting a server or other devices that demand extensive use of the network bandwidth, we recommend that you connect this device to port 1 or port 2, then upgrade the queue buffers of the selected port for higher performance. For information on buffer upgrading, see the *RAM Installation* section of Chapter 3, *Installation*.

4. Remove the protective covers from the connectors of the selected port.

5. Using the fiber cable, connect the Rx connector of the selected port to the Tx connector of the node. Then, connect the Tx connector of the port to the Rx connector of the node.

6. Repeat the same procedure to connect the other nodes.

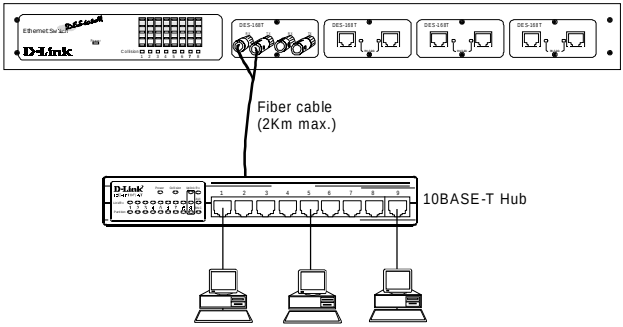

# A

# TECHNICAL SPECIFICATIONS

| | |
|---|---|
| **Standard** | IEEE 802.3 10BASE2, 10BASE-T, 10BASE-FL Ethernet |
| **Protocol** | CSMA/CD |
| **Data Transfer Rate** | 10 Mbps |
| **Topologies:**<br>**10BASE-T,**<br>**10BASE-FL**<br>**10BASE2** | <br>Star<br><br>Bus |
| **Network Cables:**<br>**10BASE2**<br>**10BASE-T**<br><br><br>**10BASE-FL** | <br>RG58A/U 50-ohm thin coaxial (185 meters max.)<br>Two-pair UTP Category 3, 4, 5 (100 meters max.);<br>EIA/TIA-568 100-ohm shielded twisted-pair<br>(100 meters max.)<br>62.5/125 µm multimode fiber cable, ST connectors (2 km max.) |
| **Number of Ports** | Maximum of 8 switched ports |
| **Number of Slots** | Four |

| | |
|---|---|
| **Number of Ports/ Slot** | Two |
| **Transmission Method** | Auto-select between cut-through and store-and-forward |
| **Queue Buffer** | 64 KB per port; ports 1 and 2 expandable to 128 KB (option) |
| **Routing Table** | 8,192 entries per port (max.); 32,768 entries for whole system (max.) |
| **MAC Address Learning** | Automatic |
| **Packet Filtering Rate** | 14,880 pps per port |
| **Packet Forwarding Rate** | 14,880 pps per port |
| **AC Input** | 100 ~ 240 VAC, 50 ~ 60 Hz |
| **Power Consumption** | 40 W (max.) |
| **Temperature:**<br>**Operating**<br>**Storage** | <br>0 ~ 50° Celsius<br>-40 ~ 70° Celsius |
| **Humidity** | 5 ~ 95% non-condensing |
| **Dimensions** | 441 x 207 x 43 mm (1 U) 19-inch rack-mountable width |
| **Weight** | 3 kg (base unit) |
| **Emission (EMI)** | FCC Class A, CE Mark Class A, VCCI |

| | |
|---|---|
| | Class 1 |
| **Safety** | UL (UL 1950), CSA (CSA 950), TUV/GS (EN60950) |

# B

# CABLES AND CONNECTORS

## 10BASE-T Twisted-Pair Cable

- Cable characteristics: 0.4 ~ 0.6 mm (22 ~ 26 AWG) 8-wire (only 4 wires are used for 10BASE-T)
- Maximum segment length: 100 meters
- Applicable connectors: RJ-45, Telco-50

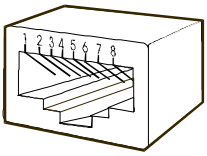


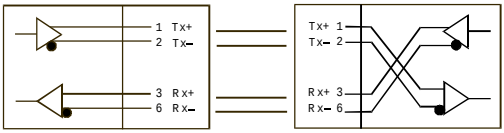


Straight cable for Switch to 10BASE-T hub connection

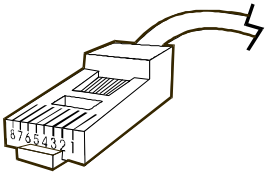


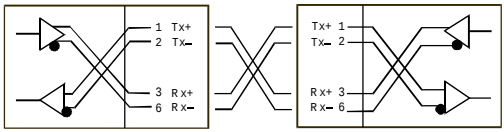


Crossover cable for Switch to other network devices connection

| RJ-45 Connector | |
|---|---|
| Contact | Media Direct Interface Signal |
| 1 | Tx + (transmit) |
| 2 | Tx - (transmit) |
| 3 | Rx + (receive) |
| 4 | Not used |
| 5 | Not used |
| 6 | Rx - (receive) |
| 7 | Not used |
| 8 | Not used |

# 10BASE2 Thin Coaxial Cable

- Cable characteristics: 0.2 inch diameter RG-58A/U 50 ohms
- Maximum segment length: 185 meters
- Maximum distance between two nodes: 0.5 meter
- Maximum number of nodes per segment: 30

# 10BASE-FL Fiber-Optic Cable

- Cable characteristics: 62.5/125 μm multimode fiber
- Maximum distance between two nodes: 2 km

# C

# SLIDE-IN PORT MODULES

The Switch supports three types of slide-in port modules, namely the DES-168T, DES-168C, and DES-168F. These modules provide various ports for connection to different network media like twisted-pair, thin coaxial cable, and fiber-optic cable. This appendix describes each module.

## DES-168T

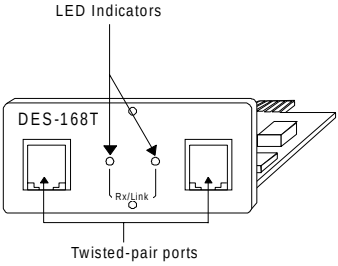


This module provides two switched twisted-pair ports for connection to twisted-pair segments. Each port supports half-duplex operations.

The DES-168T module also provides LED indicators for monitoring the port status. The following describes the function of these indicators:

- The LED indicator of a port **turns on continuously** when a successful link has been established with the connected node. If this indicator does not turn on, check the cables and connectors for any defects. Check also if you are using the correct type of cable in the connection; that is, straight twisted-pair cable for hub connection, and crossover cable for other connections.
- The LED indicator of a port **blinks** when the port is receiving data packets.

# DES-168C

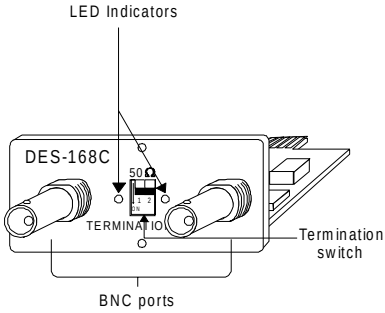


This module provides two switched BNC ports for connection to thin coaxial segments. Each port can be terminated without the use of an external 50-ohm BNC terminator, via the on-board DIP switches. To enable the port's termination, slide its respective DIP switch to the ON position.

This module also provides LED indicators for displaying the termination status for the ports. This indicator turns on when the port's termination is enabled; otherwise, it is off.

# DES-168F

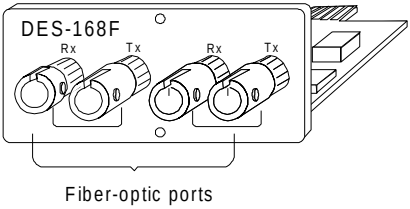


This Fiber-Optic Inter-Repeater Link (FOIRL) module provides two switched fiber-optic ports for creating fiber-optic links. Each of these ports has two connectors; one for reception (Rx) and another for transmission (Tx). When creating a link, ensure that the Rx connectors connect to the Tx connectors, and vice versa.

Each connector comes with a protective cover to prevent dust from accumulating inside the connector. Do not remove this cover unless you are ready to connect the port. Take note that too much dust may alter the intensity of light coming in and out of the port, which could lead to data interpretation errors.

# D-Link® Offices

| | |
|---|---|
| **U.S.A.** | **D-LINK SYSTEMS, INC.**<br>5 Musick Irvine, CA 92718 USA<br>TEL: 1-714-455-1688 FAX: 1-714-455-2521 |
| **CANADA** | **D-LINK CANADA, INC.**<br>2180 Dunwin Drive, Unit # 6,<br>Mississauga Ontario, L5L 5M8, Canada<br>TEL: 1-905-828-0260 FAX: 1-905-828-5669 |
| **U.K.** | **D-LINK (EUROPE) LTD.**<br>D-Link House, 6 Garland Road, Stanmore, London HA7 1DP U.K.<br>TEL: 44-181-2355555 FAX: 44-181-2355500 |
| **GERMANY** | **D-LINK (DEUTSCHLAND) GMBH I.G.**<br>Auf Der Krautweide 32, 65812 Bad Soden, Germany<br>TEL: 49-6196-643011 FAX: 49-6196-28049 |
| **FRANCE** | **D-LINK FRANCE**<br>Le FLORILEGE #2, Allee de la Fresnerie<br>78330 Fontenay Le Fleury France<br>TEL: 33-1-30238688 FAX: 33-1-30238689 |
| **SWEDEN** | **D-LINK A/B**<br>World Trade Center P. O. Box 70396, 107 24 Stockholm Sweden<br>TEL: 46-08-7006211 FAX: 46-08-219640 |
| **DENMARK** | **D-LINK DENMARK**<br>Naverland 2 DK-2600 Glostrup Copenhagen, Denmark<br>TEL:45-43-969040 FAX:45-43-424347 |
| **SINGAPORE** | **D-LINK SINGAPORE PTE.LTD.**<br>77 Science Park Drive #03-03 CINTECH III,<br>Singapore Science Park Singapore 118256<br>EL : 65-7746233 FAX: 65-7746322 |
| **AUSTRALIA** | **D-LINK AUSTRALIA PTY.LTD.**<br>Unit 16, 390 Eastern Valley Way Roseville, NSW 2069 Australia<br>TEL: 61-2-4177100 FAX: 61-2-4171077 |
| **CHINA** | **D-LINK BEIJING**<br>15th Floor, Science and Technology Tower<br>No. 11, Baishiqiao Road, Haidian District, Beijing 100081, China<br>TEL: 86-10-68467106/68467107/68467108/68467109 FAX: 86-10-68467110 |
| **JAPAN** | **D-LINK TOKYO**<br>5F, 3-9-1 Togoshi, Shinagawa-ku Tokyo 142 Japan<br>TEL: 81-3-5751-2351 FAX: 81-3-5751-2352 |
| **INDIA** | **D-LINK (INDIA) PVT. LTD.**<br>Bombay Office : Plot No.5, Kurla-Bandra Complex Rd.<br>Off Cst Rd., Santacruz (E) Bombay - 400 098 India<br>TEL: 91-22-6172478 FAX: 91-22-6172476 |
| **TAIWAN** | **D-LINK TAIWAN**<br>2F, No.233-2 Pao-Chiao Rd, Hsin-Tien, Taipei,Taiwan, R.O.C.<br>TEL: 886-2-916-1600 FAX: 886-2-914-6299 |

# Registration Card

***Print, type or use block letters.***

Your name: Mr./Ms_____
Organization: _____ Dept. _____
Your title at organization: _____
Telephone: _____ Fax:_____
Organization's full address: _____
_____
Country: _____
Date of purchase (Month/Day/Year): _____

| Product Model | Product Serial No. | * Product installed in type of computer (e.g., Compaq 486) | * Product installed in computer serial No. |
|---|---|---|---|
| | | | |
| | | | |
| | | | |
| | | | |
| | | | |

(* Applies to adapters only)

Product was purchased from:
Reseller's name: _____
Telephone: _____ Fax:_____
Reseller's full address: _____
_____
_____

**Answers to the following questions help us to support your product:**

**1. Where and how will the product primarily be used?**
☐Home ☐Office ☐Travel ☐Company Business ☐Home Business ☐Personal Use

**2. How many employees work at installation site?**
☐1 employee ☐2-9 ☐10-49 ☐50-99 ☐100-499 ☐500-999 ☐1000 or more

**3. What network protocol(s) does your organization use ?**
☐XNS/IPX ☐TCP/IP ☐DECnet ☐Others_____

**4. What network operating system(s) does your organization use ?**
☐D-Link LANsmart ☐Novell NetWare ☐NetWare Lite ☐SCO Unix/Xenix ☐PC NFS ☐3Com 3+Open
☐Banyan Vines ☐DECnet Pathwork ☐Windows NT ☐Windows NTAS ☐Windows '95
☐Others_____

**5. What network management program does your organization use ?**
☐D-View ☐HP OpenView/Windows ☐HP OpenView/Unix ☐SunNet Manager ☐Novell NMS
☐NetView 6000 ☐Others_____

**6. What network medium/media does your organization use ?**
☐Fiber-optics ☐Thick coax Ethernet ☐Thin coax Ethernet ☐10BASE-T UTP/STP
☐100BASE-TX ☐100BASE-T4 ☐100VGAnyLAN ☐Others_____

**7. What applications are used on your network?**
☐Desktop publishing ☐Spreadsheet ☐Word processing ☐CAD/CAM
☐Database management ☐Accounting ☐Others_____

**8. What category best describes your company?**
☐Aerospace ☐Engineering ☐Education ☐Finance ☐Hospital ☐Legal ☐Insurance/Real Estate ☐Manufacturing
☐Retail/Chainstore/Wholesale ☐Government ☐Transportation/Utilities/Communication ☐VAR
☐System house/company ☐Other_____

**9. Would you recommend your D-Link product to a friend?**
☐Yes ☐No ☐Don't know yet

**10.Your comments on this product?**
_____
_____

PLEASE
PLACE STAMP
HERE

TO:

D-Link®